PROJECT MANUAL

Village of Oak Park
212 Augusta St,
Oak Park, IL 60302

North Fire Station Boiler Replacement

Date: May 25, 2022

Request for Proposals

Clark Dietz: Project No. 00400040

Clark Dietz, Inc.
1815 S. Meyers Rd., Suite 470
Oakbrook Terrace, IL 60181
T. 630.413.4130

Professional Consulting and Design Services

ClarkDietz
Engineering Quality of Life™

SECTION 00 00 10

TABLE OF CONTENTS

VILLAGE OF OAK PARK
North Fire Station Boiler Replacement
OAK PARK, IL

DIVISION 00 – BIDDING AND CONTRACT REQUIREMENTS

00 10 00	Request for proposals Instructions and Specifications	00 10 00 1-35

DIVISION 01 – GENERAL REQUIREMENTS

01 10 00	Summary	01 10 00 1-3
01 29 76	Payment Procedures	01 29 76 1-3
01 30 00	Administrative Requirements	01 30 00 1-5
01 33 00	Submittal Procedures	01 33 00 1-6
01 40 00	Quality Procedures	01 40 00 1-3
01 42 16	Definitions	01 42 16 1-2
01 42 19	Reference Standards	01 42 19 1-4
01 50 00	Temporary Facilities and Controls	01 50 00 1-4
01 60 00	Product Requirements	01 60 00 1-3
01 70 00	Execution and Closeout Procedures	01 70 00 1-6

DIVISION 01 – DEMOLITION

02 41 19	Selective Demolition	02 41 19 1-3

DIVISION 23 HVAC

23 05 29	Hangers and Supports for HVAC Piping and Equipment	23 05 29 1-9
23 05 53	Identification for HVAC Piping and Equipment	23 05 53 1-3
23 05 93	Testing, Adjusting and Balancing for HVAC	23 05 93 1-5
23 07 00	HVAC Insulation	23 07 00 1-6
23 08 00	Commissioning of HVAC	23 08 00 1-5
23 11 23	Facility Natural Gas Piping	23 11 23 1-5
23 21 13	Hydronic Piping	23 21 13 1-5
23 21 16	Hydronic Piping Specialties	23 21 16 1-7
23 21 23	Hydronic Pumps	23 21 23 1-2
23 52 34	High Efficiency Condensing Boilers	23 52 34 1-4

DIVISION 26 – ELECTRICAL

26 05 00	Common Work Results for Electrical	26 05 00 1-6
26 05 02	Electrical Demolition and Remodeling	26 05 02 1-4
26 05 19	Low-Voltage Electrical Power Conductors	26 05 19 1-5
26 05 26	Grounding and Bonding for Electrical Systems and Cables	26 05 26 1-3
26 05 29	Hangers and Supports for Electrical Systems	26 05 29 1-7
26 05 33	Raceway and Boxes for Electrical Systems	26 05 33-1-6
26 05 53	Identification for Electrical Systems	26 05 53-1-3
26 29 13	Enclosed Controllers	26 29 13 1-3

END OF SECTION

REQUEST FOR BIDS
INSTRUCTIONS AND SPECIFICATIONS FOR:

Village of Oak Park North Fire Station Boiler Replacement
Bid Number: 22-401BM
Issuance Date: 5/25/2022

The Village of Oak Park will receive bids from qualified mechanical contractors to remove the existing boiler system and install a new boiler system at the north fire station located at 212 Augusta in Oak Park, Illinois. Bids will be accepted at the Public Works Center, 201 South Blvd., Oak Park, IL 60302 Monday through Friday, 7:30 a.m. to 4:00 p.m. local time until 10:00 a.m. **on Friday, June 10th, 2022**. Bids may also be sent via e-mail to vics@oak-park.us. Bids will be reviewed and the results of the review will be presented to the Village of Oak Park Board of Trustees.

There will be a pre-bid meeting at the north fire station, located at 212 Augusta, Oak Park, IL on Wednesday, June 1st, 2022 at 9:00 a.m. Prospective bidders are encouraged to attend the pre-bid meeting to inspect site conditions, receive design drawings and obtain other pertinent information about the scope of work.

Specifications and bid forms may be obtained by sending a request to Building Maintenance Superintendent, Vic Sabaliauskas at vics@oak-park.us or by stopping by the Public Works Center at the address listed above or by calling 708-358-5710.

The Board of Trustees reserves the right to accept or reject any and all Bids or to waive technicalities, or to accept any item of any Bid.

Do not detach any portion of this document. Upon formal award to the successful contractor, a written agreement will be executed in substantially the form attached.

In responding to this Request for Bids, the official logo of the Village of Oak Park is not to be used in any form. Use of the Village logo is strictly prohibited by law and such use could subject the proposer to disqualification.

Submission of Bids

The bid shall be submitted on the bid form included herewith. If bid is hand delivered or mailed to the Public Works Center, the bid shall be submitted in a sealed envelope marked **"BID: 22-4401BM Village of Oak Park North Fire Station Boiler Replacement"**, shall bear the return address of the bidder, and shall be addressed as follows:

TO: Vic Sabaliauskas, Building Maintenance Superintendent
Department of Public Works
201 South Blvd.
Oak Park, IL 60302

SECTION I
BID INSTRUCTIONS, TERMS AND CONDITIONS

Preparation and Submission of Bid
All bids must be delivered to the Public Works Center by the specific time indicated on the cover page. Bids arriving after the specified time will not be accepted. Mailed Bids that are received by the Village after the specified hour will not be accepted regardless of the post-marked time on the envelope. Bids must be signed by an officer of the company who is authorized to enter into agreements on behalf of the company. Bids shall be sealed in an envelope and marked as stated on the cover page.

Bid Bond
The contractor shall provide a Bid bond in the amount of ten percent (10%) of the total Bid price. The attached form may be used or the contractor may provide cash or a certified check in the amount specified. The Bid bonds, cash or checks will be returned once the selected contractor has entered into an agreement for this work and provided the Contract bond in an amount of one hundred percent (100%) of the total approved Bid price.

Contract Bond
The successful contractor shall, within ten (10) calendar days after award of the Bid, furnish a contract bond in the amount of one hundred percent (100%) of the contract price. The bond shall ensure faithful performance of the work, and the payment for materials, labor and of the subcontractors. The bond shall be with a surety or sureties with a rating of "A" or better by A.M. Best and Company and such sureties shall be approved by the Village. Bonds in the form of certified or cashier's check shall be made payable to the Village of Oak Park, Illinois. The contract bond shall be furnished in the same number of copies as the number of copies of the agreement to be executed.

Award of Agreement
The agreement will be awarded in whole or in part to the responsible contractor whose Bid, conforming to the Request for Bids, will be most advantageous to the Village; price and other factors considered.

Costs of Preparation
The Village will not be responsible for any expenses incurred in preparing and submitting a Bid or entering into the applicable agreement.

Taxes not Applicable
The Village of Oak Park as an Illinois municipality pays neither Illinois Sales Tax nor Federal Excise Tax (State Tax Exemption Identification Number E9998-1823-06). Contractors should exclude these taxes from their prices.

Withdrawal of Bids
Any contractor may withdraw its Bid at any time prior to the time specified in the advertisement as the closing time for the receipt of Bids, by signing a request therefore. No contractor may withdraw or cancel its Bid for a period of sixty (60) calendar days after the advertised closing

time for the receipt of Bids. The successful contractor may not withdraw or cancel its Bid after having been notified that the Bid was accepted by the Village Board of Trustees.

Investigation of Contractors

The Village will make such investigations as are necessary to determine the ability of the contractor to fulfill Bid requirements. If requested, the contractor should be prepared to present evidence to the Village of Oak Park of ability and possession of necessary facilities and financial resources to comply with the terms of the attached specifications and Bids. In addition, the contractor shall furnish the Village with any information the Village may request, and shall be prepared to show completed work of a similar nature to that included in its Bid. The Village reserves the right to visit and inspect the premises and operation of any contractor.

Rejection of Contractor

The Village will reject any Bid from any person, firm or corporation that appears to be in default or arrears on any debt, agreement or the payment of any taxes. The Village will reject any Bid from a contractor that failed to satisfactorily complete work for the Village under any previous agreement.

Conditions

Contractors are advised to become familiar with all conditions, instructions and specifications governing the work. Contractors shall be presumed to have investigated the work site, conditions and scope of the work before submitting a Bid.

Compliance with Applicable Laws

The contractor will strictly comply with all ordinances of the Village of Oak Park and Village Code and laws of the State of Illinois.

Governing Law

All agreements entered into by the Village of Oak Park are governed by the laws of the State of Illinois without regard to conflicts of law. Any action brought to enforce an agreement with the Village of Oak Park must be brought in the state and federal courts located in Cook County, Illinois.

Subletting of Agreement

No agreement awarded by the Village of Oak Park shall be assigned or any part sub-agreement without the written consent of the Village of Oak Park or as noted in the contractor's Bid. In no case shall such consent relieve the contractor from its obligations or change the terms of the agreement.

Interpretation of Agreement Documents

Any contractor with a question about this Bid may request an interpretation thereof from the Village. If the Village changes the Bid, either by clarifying it or by changing the specifications, the Village will issue a written addendum, and will mail a copy of the addendum to all prospective contractors. The Village will not assume responsibility for receipt of such addendum. In all cases, it will be the contractor's responsibility to obtain all addenda issued. Contractors will provide written acknowledgment of receipt of each addendum issued with the Bid submission.

Minority Business and Women Business Enterprise Requirements

The Village of Oak Park, in an effort to reaffirm its policy of non-discrimination, encourages the efforts of contractors and subcontractors to take affirmative action in providing for Equal Employment Opportunity without regard to race, religion, creed, color, sex, national origin, age, handicap unrelated to ability to perform the job or protected veteran's status.

Licenses and Permits

The contractor shall be responsible for becoming a licensed contractor in the Village. The contractor shall also be responsible for obtaining any and all required permits from the Village's Development Customer Services Department (Building Permits Division). The Village shall waive all permit fees.

Agreement

The selected contractor shall enter into an Independent Contractor Agreement with the Village to complete the work in a form substantially similar to the agreement attached hereto. The agreement shall be executed by the contractor and returned, together with the contract bond within ten (10) calendar days after the agreement has been mailed to the contractor. The contractor shall execute three copies of the agreement. One fully executed copy will be returned to the contractor.

Notice to Proceed

Work shall begin within fourteen (14) days from the Notice to Proceed from the Village's Building Maintenance Superintendent. All work shall be completed in accordance with the detailed specifications set forth herein, unless the Building Maintenance Superintendent grants an extension.

Fees and Cost

In the event any action is brought to enforce any agreement entered into by the Village of Oak Park, or to collect any unpaid amount from the Village of Oak Park, each party bears the responsibility of paying its own attorneys' fees and costs.

Dispute Resolution

The Village of Oak Park does not agree to the mandatory arbitration of any dispute.

SECTION II
DETAILED SPECIFICATIONS

See attached detailed specifications and design documents as submitted by the design firm of Clark Dietz, Inc. 312.466.8242

The selected contractor shall furnish all labor, supervision, supplies, tools, equipment, vehicles and other means necessary or proper for performing and completing the work. The selected contractor shall be responsible for the cleaning up of the job site and shall repair or restore all structures and property that may be damaged or disturbed during performance of the work to the satisfaction of the Village of Oak Park.

All work shall be carried out in conformance with the laws and regulations of the Village of Oak Park and these specifications. All work shall be performed according to the standards set forth in the applicable building codes and standards, including mechanical, fire, plumbing, electric, accessibility, or any other applicable codes in force in the Village of Oak Park and State of Illinois.

Alterations, Omissions and Extra Work

The Village of Oak Park reserves the right to increase or decrease the quantity of any item or portion of the work, or to omit portions of the work as may be deemed necessary.

Job Site Conditions

To the fullest extent possible, the contractor will not allow its work to interfere with the critical operations of the Fire Department. Contractor will take all necessary actions as directed by the Village in that regard.

Material Storage: The contractor shall be responsible for the storage and safety of his own materials. The Village assumes no liability whatever for any material damaged or stolen on the premises. Any damage to, or loss by theft or vandalism of any material, appurtenance, or appliance, after such has been applied, connected or installed on Village property, shall be the sole responsibility of the contractor until the project is completed and accepted by the Village.

Safety Precautions: The contractor is solely responsible for implementing effective safety precautions on and around the work site to protect workers and other persons who might be affected and shall exercise every precaution at all times for the protection of the property. The contractor shall not leave any combustible materials or other fire hazards overnight or allowed them to accumulate. The contractor shall abide by all applicable laws, standards, and regulations that apply to the completion of the work, including EPA and OSHA safety standards and regulations.

Damage to Property: Contractor shall repair, at no additional cost to the Village, all damage to Village property caused by the contractor resulting from his work. Where repair of existing work is called for, such patching and replacement shall be made to blend with existing work so that the patch or replacement will be inconspicuous after finishing.

Daily Clean-up: The contractor shall keep the premises clean and orderly during the course of the work and all debris shall be removed on a continuous basis.

Method of Payment

The Village of Oak Park will pay monthly all undisputed invoices billed at the rates set forth in the contractor's Bid within 30 days of approval as provided in the Local Government Prompt Payment Act, 50 ILCS505/4. The maximum interest rate for any payment not made within 30 days of approval is 1%.

Change Orders

Change Orders: Changes in the Work may be agreed to after execution of the agreement, and without invalidating the agreement, if the change order is in writing and signed. Any changes to the scope of work which result in an increase in the agreement price will be subject to an agreement addendum which must be signed by both parties. Any such change order will be prepared by the Village. The contractor may only proceed with the change upon receipt of the written change order signed by the Village.

Emergency Changes: Contractor may perform work not included in the scope of work if necessary to remedy a condition that poses an immediate threat to persons or property. Work of this nature shall be carried out only to the extent of bringing the condition under control. The Village shall be notified immediately. A change order will then be negotiated and executed for the work performed, and for work remaining, if any.

Minor Changes (Field Orders): The Village may verbally authorize minor changes in the scope of work in order to prevent a delay in the progression of the work. These field orders may not involve a change in the agreement price or be inconsistent with the scope of work.

Changes Due to Unknown Conditions: The contractor is not responsible for changes in the work that are due to conditions that were not reasonably observable or conditions that have changed. In such cases, the contractor shall notify the Village and a change order will be negotiated.

Any change which results in a total agreement price in excess of $10,000 must be approved by the Village of Oak Park Board of Trustees.

Correction of Work Prior To Final Payment

The Village has the right to stop work if the contractor fails to carry out the work in a manner acceptable to the Village. If the Village deems the contractor's work unacceptable, at the Village's election, the contractor shall do one of the following:

1. Promptly repair or replace the defective work, without expense to the Village, including costs associated with repairing any damage to property caused by the replacement work; or;
2. If the Village deems it unacceptable to have the contractor correct work which has been incorrectly done, a deduction from the agreement price shall be made based on the costs to the Village to have the work repaired. Such a deduction from the agreement price shall in no way affect the Village's other remedies or relieve the

contractor from responsibility for defects and related damage occurring as a result of defective or unacceptable work.

Contractor's Representative

The contractor shall have at all times a competent foreman or superintendent on the job that shall have full authority to act for the contractor, and to receive and execute orders from the Director of Public Works or appointed representative. Any instructions given to such superintendent or person executing work for the contractor shall be binding on the contractor as though given to him personally. Contractor's representative must be proficient in the use and interpretation of the English language.

Workers

The contractors shall employ competent laborers and shall replace, at the request of the Building Maintenance Superintendent any incompetent, unfaithful, abusive or disorderly workers in their employ. Only workers expert in their respective branches of work shall be employed where special skill is required. Inappropriate behavior or examples of unproductive work effort will not be tolerated. The Village has the right to require a contractor's employee to be immediately removed from the work crew if the above behavior is exhibited.

Dispute Resolution

All disputes, including collection disputes, shall be brought in the Circuit Court of Cook County, Illinois. This agreement shall be interpreted in accordance with the laws of the State of Illinois. In any dispute resolution process, each party shall bear its own costs, including attorney's fees. Any purported agreement between the parties that states terms contrary to this paragraph M will be deemed per se invalid.

Mandatory Qualifications for Contractor's Personnel

Crews shall include at least one (1) supervisor during any given shift.

1. No more than 50% of the crew may be trainees at any one time.

2. Supervisors must be fluent in the English language and capable of reading and writing English.

3. Technicians employed by the contractor selected shall be fully trained and skilled in safe and proper techniques. Specific training required must follow the OSHA standards (*see below*).

4. The contractor selected shall provide sufficient documentation, if requested by the Village, to demonstrate adequate training has been provided upon commencement of the agreement. Contractor selected shall submit statement outlining training program and method of verifying employee competency. Failure to do so may be ample cause for rejection of Bid. The use of technicians who are not adequately trained may be sufficient grounds for termination of the agreement.

5. The Village reserves the right to require immediate removal of any employee of the contractor selected deemed unfit for service for any reason. This right is non-negotiable and the

contractor selected agrees to this condition by accepting this agreement. The contractor selected shall have enough qualified personnel to replace a terminated employee within 24 hours. Failure to do so can result in the termination of the agreement.

OSHA Requirements

1. Material Safety Data Sheets – Contractor selected shall furnish the Village of Oak Park copies of Material Safety Data Sheets (MSDS), for all products used, prior to beginning service at Village facilities. In addition, each time a new chemical is introduced, a copy of that product's MSDS must be provided to the Building Maintenance Superintendent prior to the product being used. The Material Safety Data Sheets must be in compliance with OSHA Regulation 1910.1200, paragraph g.

2. Labeling of Hazardous Materials – Contractor selected shall comply with OSHA regulation 1919.1200, paragraph f, concerning labeling of all chemical containers.

3. Caution Signs – Contractor selected shall use "caution signs" as required by OSHA Regulation 1910.44 and 1910.145 at no cost to the Village. Caution signs shall be on-site upon commencement of agreement.

Proof of compliance with OSHA regulation 1920.1200, Hazard Communication, shall be provided to the Building Maintenance Superintendent upon commencement of this agreement, if requested.

Failure of the contractor selected or his/her employees to comply with all applicable laws, regulations and rules shall permit the Village to immediately terminate this agreement without liability.

Prevailing Wages

Contractor and any applicable subcontractor shall pay prevailing wages as established by the Illinois Department of Labor and determined by the Village for each craft or type of work needed to execute the contract in accordance with the Illinois Prevailing Wage Act, 820 ILCS 130/0.01 *et seq.* ("Act"). Contractor shall prominently post the current schedule of prevailing wages at the Project site(s) and shall notify immediately in writing all of its subcontractors of all changes in the schedule of prevailing wages. Any increases in costs to Contractor due to changes in the prevailing rate of wage during the terms of any Contract shall be at the sole expense of Contractor and not at the expense of the Village, and shall not result in an increase to the Contract Price. Contractor shall be solely responsible to maintain accurate records as required by the Act and shall submit certified payroll records to the Village evidencing its compliance with the Act on no less than a monthly basis as required by the Act. Contractor shall be solely liable for paying the difference between prevailing wages and any wages actually received by laborers, workmen and/or mechanics engaged in the Work for the Project.

Contractor shall indemnify, hold harmless, and defend the Village, its officers, officials, employees, agents and volunteers ("Indemnified Parties") against all regulatory actions, complaints, damages, claims, suits, liabilities, liens, judgments, costs and expenses, including reasonable attorney's fees, which may in any way arise from or accrue against the Indemnified

Parties as a consequence of noncompliance with the Act or which may in any way result therefrom, including a complaint by the Illinois Department of Labor under Section 4(a-3) of the Act, 820 ILCS 130/4(a-3) that any or all of the Indemnified Parties violated the Act by failing to give proper notice to the Grantee or any other party performing work on the Public Improvements that not less than the prevailing rate of wages shall be paid to all laborers, workers and mechanics performing Work on the Project, including interest, penalties or fines under Section 4(a-3). The indemnification obligations of this section on the part of Contractor shall survive the termination or expiration of this Agreement. In any such claim, complaint or action against the Indemnified Parties, Contractor shall, at its own expense, appear, defend and pay all charges of reasonable attorney's fees and all reasonable costs and other reasonable expenses arising therefrom or incurred in connection therewith, and, if any judgment or award shall be rendered against the Indemnified Parties in any such action, Contractor shall at its own expense, satisfy and discharge such judgment or award.

SECTION III
SCOPE OF WORK

See attached detailed specifications and design documents as submitted by the design firm of Clark Dietz, Inc. 312.466.8242

SECTION IV
BID FORM (Pricing)

The undersigned proposes to furnish all labor and materials required to complete the work in accordance with the attached specifications and at the price indicated below.

Total Lump Sum Cost: $_____

24-Hour Emergency Call-back Number:

(_____) _____

Printed Name:_____

Bid Signature: _____

State of _____) County of _____)

_____,
(Type Name of Individual Signing)

being first duly sworn on oath deposes and says that the contractor on the above Bid is organized as indicated below and that all statements herein made on behalf of such Contractor and that their deponent is authorized to make them, and also deposes and says that deponent has examined and carefully prepared their Bid from the agreement specifications and has checked the same in detail before submitting this Bid; that the statements contained herein are true and correct.

Signature of contractor authorizes the Village of Oak Park to verify references of business and credit at its option.

Signature of contractor shall also be acknowledged before a Notary Public or other person authorized by law to execute such acknowledgments.

Dated: _____/____/2022 _____
Organization Name
(Seal - If Corporation)
By:

_____ _____
Authorized Signature Address

E:mail address:_____

Telephone:_____

Subscribed and sworn to before me this _____ day of _____, 2022.
_____ in the State of _____. My Commission
Notary Public

Expires on ____/____/_____

Complete Applicable Paragraph Below

(a) Corporation

The contractor is a corporation, which operates under the legal name of _____and is organized and existing under the laws of the State of _____. The full names of its Officers are:

President_____

Secretary_____

Treasurer_____

The corporation does have a corporate seal. (In the event that this Bid is executed by a person other than the President, attach hereto a certified copy of that section of Corporate By-Laws or other authorization by the Corporation that permits the person to execute the offer for the corporation.)

(b) Partnership

Names, Signatures, and Addresses of all Partners

_____

_____

The partnership does business under the legal name of _____, which name is

is registered with the office of _____ in the county of
_____.

(c) Sole Proprietor

The contractor is a Sole Proprietor whose full name is
_____. If the contractor is operating under

a trade name, said trade name is _____,

which name is registered with the office of _____

in the county of _____.

Signed:_____
Sole Proprietor

In compliance with the above, the undersigned offers and agrees, if his/her Bid is accepted within ninety (90) calendar days from date of opening, to furnish any or all of the items upon which prices are quoted, at the price set opposite each item, delivered at the designated point within the time specified above.

MUNICIPAL QUALIFICATION REFERENCE SHEET

MUNICIPALITY _____

ADDRESS _____

_____

CONTACT _____

PHONE _____

WORK PERFORMED _____
_____

MUNICIPALITY _____

ADDRESS _____

_____

CONTACT _____

PHONE _____

WORK PERFORMED _____
_____

MUNICIPALITY _____

ADDRESS _____

_____

CONTACT _____

PHONE _____

WORK PERFORMED _____
_____

SECTION V
CONTRACTOR CERTIFICATION

_____, as part of its Bid on an agreement for construction Work
(Name of Contractor selected) for the Village of Oak Park, hereby certifies that said contractor selected is not barred from proposing on the aforementioned agreement as a result of a violation to either Section 33E-3 or 33E-4 of Article 33E of Chapter 38 of the Illinois Revised Statutes or Section 2-6-12 of the Oak Park Village Code relating to "Proposing Requirement.

_____
(Authorized Agent of Contractor selected)

Subscribed and sworn to before me this _____ day of _____, 2022.

_____
Notary Public's Signature - Notary Public Seal -

SECTION VI
TAX COMPLIANCE AFFIDAVIT

_____, being first duly sworn, deposes and says:

that he/she is _____ of
(partner, officer, owner, etc.)

_____.
(Contractor selected)

The individual or entity making the foregoing Bid or Bid certifies that he/she is not barred from entering into an agreement with the Village of Oak Park because of any delinquency in the payment of any tax administered by the Department of Revenue unless the individual or entity is contesting, in accordance with the procedures established by the appropriate revenue act, liability for the tax or the amount of the tax. The individual or entity making the Bid or Bid understands that making a false statement regarding delinquency in taxes is a Class A Misdemeanor and, in addition, voids the agreement and allows the municipality to recover all amounts paid to the individual or entity under the agreement in civil action.

_____
By:
Its:
_____
(name of contractor if the contractor is an individual)
(name of partner if the contractor is a partnership)
(name of officer if the contractor is a corporation)

The above statement must be subscribed and sworn to before a notary public.

Subscribed and sworn to before me this _____ day of _____, 2022.

_____
Notary Public's Signature - Notary Public Seal -

Reporting Requirements
The following forms must be completed in their entirety, notarized and included as part of the Bid document. Failure to respond truthfully to any question on the list or failure to cooperate fully with further inquiry by the Village of Oak Park will result in disqualification of your Bid.

SECTION VII
ORGANIZATION OF BIDDING FIRM

Please fill out the applicable section:

A. Corporation:
The contractor is a corporation, legally named _____ and is organized and existing in good standing under the laws of the State of _____. The full names of its officers are:

President_____

Secretary_____

Treasurer_____

Registered Agent Name and Address: _____

The corporation has a corporate seal. (In the event that this Bid is executed by a person other than the President, attach hereto a certified copy of that section of Corporate By-Laws or other authorization by the Corporation that permits the person to execute the offer for the corporation.)

B. Sole Proprietor:
The contractor is a Sole Proprietor. If the contractor does business under an assumed name, the

assumed name is _____, which is registered with the Cook County Clerk. The contractor is otherwise in compliance with the Assumed Business Name Act, 805 ILCS 405/0.01, et. seq.

C. Partnership:
The contractor is a partnership which operates under the name _____

The following are the names, addresses and signatures of all partners:

_____ _____

_____ _____
Signature Signature

(Attach additional sheets if necessary.) If so, check here _____.

If the partnership does business under an assumed name, the assumed name must be registered with the Cook County Clerk and the partnership is otherwise in compliance with the Assumed Business Name Act, 805 ILCS 405/0.01, et. seq.

D. Affiliates: The name and address of any affiliated entity of the business, including a description

of the affiliation: _____

_____
Signature of Owner

SECTION VIII
BID BOND

WE _____
as PRINCIPAL, and _____
as SURETY, are held and firmly bound unto the Village of Oak Park, Illinois (hereafter referred to as "VOP") in the penal sum of Ten Percent (10%) of the total Bid price, as specified in the invitation for Bids. We bind ourselves, our heirs, executors, administrators, successors, and assigns, jointly to pay to the VOP this sum under the conditions of this instrument.

WHEREAS THE CONDITION OF THE FOREGOING OBLIGATION IS SUCH that, the said PRINCIPAL is submitting a written Bid to the VOP acting through its awarding authority for the completion of the work designated as the above section.

THERFORE if the Bid is accepted and an agreement awarded to the PRINCIPAL by the VOP for the above-designated section and the PRINCIPAL shall within fifteen (15) days after award enter into a formal agreement, furnish surety guaranteeing the faithful performance of the work, and furnish evidence of the required insurance coverage, all as provided in specifications then this obligation shall become void; otherwise it shall remain in full force and effect.

IN THE EVENT the VOP determines the PRINCIPAL has failed to enter into a formal agreement in compliance with any requirements set forth in the preceding paragraph, then the VOP acting through its awarding authority shall immediately be entitled to recover the full penal sum set out above, together with all court costs, all attorney fees, and any other expense of recovery.

IN TESTIMONY WHEREOF, the said PRINCIPAL and the said SURETY have caused this instrument to be signed by their respective officers this _____ day of _____A.D. 2022.

PRINCIPAL

_____	_____
(Company Name)	(Company Name)
By: _____	By: _____
(Signature & Title)	(Signature & Title)

(If PRINCIPAL is a joint venture of two or more contractors, the company names, and authorized signatures of each contractor must be affixed)

Subscribed to and sworn before me on the

_____ day of _____, 2022.

_____
Notary Public

NAME OF SURETY

By: _____
Signature of Attorney-in-Fact

subscribed to and sworn before me on the

_____ day of _____, 2022.

_____
Notary Public

SECTION IX
CONTRACT BOND

Contract Bond

_____, as PRINCIPAL, and _____as SURETY, are held and firmly bound unto the Village of Oak Park (hereafter referred to as "Village") in the penal sum of _____, well and truly to be paid to the Village, for the payment of which its heirs, executors, administrators, successors and assigns, are bound jointly to pay to the Village under the conditions of this instrument.

WHEREAS, THE CONDITION OF THE FOREGOING OBLIGATION IS SUCH that, the Principal has entered into a written contract with the Village, acting through its President and Board of Trustees, for the construction of work, which contract is hereby referred to and made a part hereof as if written herein at length, and whereby the Principal has promised and agreed to perform the work in accordance with the terms of the contract, and has promised to pay all sums of money due for any labor, materials, apparatus, fixtures or machinery furnished to such Principal for the purpose of performing such work, including paying not less than the prevailing rate of wages in Cook County, where the work is for the construction of any public work subject to the Prevailing Wage Act, and has further agreed to save and indemnify and keep harmless the Village against all liabilities, judgments, costs and expenses which may in any manner accrue against the Village in consequence of granting such contract or which may in any manner result from the carelessness or neglect of the Principal, his agents, employees or workmen in any respect whatever; and has further agreed that this bond will inure to the benefit of any person, firm, company, or corporation, to whom any money may be due from the Principal, subcontractor or otherwise, for any such labor, materials, apparatus, fixtures or machinery so furnished and that suit may be maintained on such bond by any such person, firm, company, or corporation, for the recovery of any such money.

NOW THEREFORE, if the Principal shall well and truly perform the work in accordance with the terms of the contract, and shall pay all sums of money due or to become due for any labor, materials, apparatus, fixtures or machinery furnished to it for the purpose of constructing such work, and shall commence and complete the work within the time prescribed in the contract, and shall pay and discharge all damages, direct and indirect, that may be suffered or sustained on account of such work during the time of performance thereof and until the work shall have been accepted, and shall save and indemnify and keep harmless the Village against all liabilities, judgments, costs and expenses which may in any manner accrue against the Village in consequence of granting such contract or which may in any manner result from the carelessness or neglect of the Principal, his agents, employees or workmen in any respect whatever; and shall in all respects fully and faithfully comply with all the provisions, conditions, and requirements of the contract, then this obligation will be void; otherwise it will remain in full force and effect.

IN WITNESS WHEREOF, the PRINCIPAL and the SURETY have caused this instrument to be signed by their respective officers this _____ day of _____**,** 2022.

NAME OF PRINCIPAL

By: _____
Signature

By: _____
Printed Name

Its: _____
Title

Subscribed to and Sworn before me on the

_____ day of _____, 2022.

_____
Notary Public

NAME OF SURETY

By: _____
Signature of Attorney-in-Fact

Subscribed to and Sworn before me on the

_____ day of _____, 2022.

_____
Notary Public

SECTION X
COMPLIANCE AFFIDAVIT

I, _____, (print name) being first duly sworn on oath depose and state:

1. I am the (title) _____ of the proposing company and am authorized to make the statements contained in this affidavit on behalf of the company;
2. I have examined and carefully prepared this Bid based on the request and have verified the facts contained in the Bid in detail before submitting it;
3. The proposing company is organized as indicated above on the form entitled "Organization of Proposing Company."
4. I authorize the Village of Oak Park to verify the company's business references and credit at its option;
5. Neither the proposing company nor its affiliates[1] are barred from proposing on this project as a result of a violation of 720 ILCS 5/33E-3 or 33E-4 relating to Bid rigging and Bid rotating, or section 2-6-12 of the Oak Park Village Code relating to "Proposing Requirements".
6. The proposing company has the M/W/DBE status indicated below on the form entitled "EEO Report."
7. Neither the proposing company nor its affiliates is barred from agreementing with the Village of Oak Park because of any delinquency in the payment of any debt or tax owed to the Village except for those taxes which the proposing company is contesting, in accordance with the procedures established by the appropriate revenue act, liability for the tax or the amount of the tax. I understand that making a false statement regarding delinquency in taxes is a Class A Misdemeanor and, in addition, voids the agreement and allows the Village of Oak Park to recover all amounts paid to the proposing company under the agreement in civil action.
8. I am familiar with Section 13-3-2 through 13-3-4 of the Oak Park Village Code relating to Fair Employment Practices and understand the contents thereof; and state that the proposing company is an "Equal Opportunity Employer" as defined by Section 2000(E) of Chapter 21, Title 42 of the United States Code Annotated and Federal Executive Orders #11246 and #11375 which are incorporated herein by reference. **Also complete the attached EEO Report or Submit an EEO-1.**
9. I certify that the contractor is in compliance with the Drug Free Workplace Act, 41 U.S.C.A, 702

Signature:_____

Name and address of Business:_____

Telephone _____ E-Mail _____

Subscribed to and sworn before me this _____ day of _____, 2022.

_____

Notary Public - Notary Public Seal -

[1] Affiliates means: (i) any subsidiary or parent of the agreementing business entity, (ii) any member of the same unitary business group; (iii) any person with any ownership interest or distributive share of the agreementing business entity in excess of 7.5%; (iv) any entity owned or controlled by an executive employee, his or her spouse or minor children of the agreementing business entity.

SECTION XI
M/W/DBE STATUS AND EEO REPORT

Failure to respond truthfully to any questions on this form, failure to complete the form or failure to cooperate fully with further inquiry by the Village of Oak Park will result in disqualification of this Bid.

1. Contractor Name:_____

2. Check here if your firm is:

   - ☐ Minority Business Enterprise (MBE) (A firm that is at least 51% owned, managed and controlled by a Minority.)
   - ☐ Women's Business Enterprise (WBE) (A firm that is at least 51% owned, managed and controlled by a Woman.)
   - ☐ Owned by a person with a disability (DBE) (A firm that is at least 51% owned by a person with a disability)
   - ☐ None of the above

   [Submit copies of any W/W/DBE certifications]

3. What is the size of the firm's current stable work force?

   _____ Number of full-time employees

   _____ Number of part-time employees

4. Similar information will be requested of all sub-contractors working on this agreement. Forms will be furnished to the lowest responsible contractor with the notice of agreement award, and these forms must be completed and submitted to the Village before the execution of the agreement by the Village.

Signature: _____

Date: _____

EEO Report

Please fill out this form completely. Failure to respond truthfully to any questions on this form, or failure to cooperate fully with further inquiry by the Village of Oak Park will result in disqualification of this Bid. An incomplete form will disqualify your Bid.

An EEO-1 Report may be submitted in lieu of this report____

Contractor Name_____
Total Employees_____

					Males				Females				
Job Category	Total # of Empl.	Total Males	Total Females	Black	Hispanic	American Indian	Alaskan Native	Asian & Pacific Islander	Hispanic	American Indian	Alaskan Native	Asian & Pacific Islander	Total Minorities
Officials & Managers													
Professionals													
Technicians													
Sales Workers													
Office & Clerical													
Semi-Skilled													
Laborers													
Service Workers													
Management Trainees													
Apprentices													

This completed and notarized report must accompany your Bid. It should be attached to your Affidavit of Compliance. Failure to include it with your Bid will be disqualify you from consideration.

_____, being first duly sworn, deposes and says that he/she is the_____
(Name of Person Making Affidavit)
(Title or Officer)
of _____and that the above EEO Report information is true and accurate and is submitted with the intent that it

be relied upon. Subscribed and sworn to before me this _____ day of _____, 2022.

_____ _____
(Signature) (Date

SECTION XII
NO BID EXPLANATION

If your company does not wish to propose on the attached specifications, the Village of Oak Park would be interested in any explanation or comment you may have as to what prevented your firm from submitting a Bid.

Thank you.

Bid Name:

Village of Oak Park North Fire Station Boiler Replacement
Bid Number: 22-401BM
Issuance Date: 5/25/2022

Comments:

Signed: _____

Phone:_____

SAMPLE ONLY

INDEPENDENT CONTRACTOR AGREEMENT

THIS INDEPENDENT CONTRACTOR AGREEMENT ("Contract"") is entered into on the ____ day of _____ 2022, by and between the Village of Oak Park, an Illinois home rule municipal corporation (hereinafter the "Village"), and _____, a _____ (hereafter the "Contractor").

WHEREAS, the Contractor submitted a Bid to _____(hereinafter referred to as the "Work"), pursuant to the Village's Request for Bids, attached hereto and incorporated herein by reference; and

WHEREAS, the Contractor represented in said Bid that it has the necessary personnel, experience, and competence to promptly complete the Work and the work required hereunder; and

WHEREAS, the Contractor's Bid is attached hereto and incorporated herein by reference into this Agreement; and

WHEREAS, the Contractor shall perform the Work pursuant to the terms and conditions of this Contract..

NOW, THEREFORE, in consideration of the premises and the mutual promises contained in this Contract,, and other good and valuable consideration received and to be received, it is mutually agreed by and between the parties as follows:

1. RECITALS INCORPORATED

The above recitals are incorporated herein as though fully set forth.

2. SCOPE OF WORK

The Contractor shall perform the Work in accordance with its Bid for a total cost not to exceed $_____ ("Contract Price"). The Contractor shall complete the Work in accordance with any applicable manufacturers' warranties and in accordance with the Village's Request for Bids, the Contractor's Bid and this Contract, all of which, together shall constitute the Contract Documents. The Contractor acknowledges that it has inspected the sites where the work is to be performed and that it is fully familiar with all of the conditions at the sites, and further that its Bid has adequately taken into consideration all of the conditions at the sites. The Contractor hereby represents and warrants that it has the skill and experience necessary to complete this Work in a good and workmanlike manner. The Contractor further represents and warrants that the Work will be completed in a good and workmanlike manner in accordance with the Contract Documents, and that the Work will be free from defects.

The Contractor shall achieve completion of all work required pursuant to the Contract Documents by December 31, 2022 ("Contract Time"). The Contract Time is of the

essence. In the event the Contractor fails to complete the Project on or before said date, the Village shall be entitled to liquidated damages in the amount of $500.00 per day for each day the work remains uncompleted beyond the completion date set forth above. This amount is not a penalty, and the parties agree to said amount given the difficulties associated with determining or calculating damages to the Village in the event the Project is not completed on time. The Contractor shall have no claim for damages, for compensation in excess of the Contract Price, or for a delay or extension of the Contract Time based upon conditions found at, or in the vicinity of, the site(s).

3. DESIGNATED REPRESENTATIVES

The Contractor shall designate in writing a person to act as its designated representative with respect to the Work to be performed under this Agreement. Such person shall have complete authority to transmit and receive instructions and information, interpret and define the Contractor's policies and decisions with respect to the Work governed by this Contract. The Village's Building Maintenance Superintendent shall have complete authority to transmit and receive instructions and information, interpret and define the Village's policies and decisions with respect to the Work governed by this Contract, or such other person as designated in writing by the Village Manager.

4. TERM OF CONTRACT

The Contractor shall perform the Work pursuant to this Contract beginning on the effective date as defined herein and ending on December 31st, 2022 or on the date that the Work is completed as determined by the Village. The Contractor shall invoice the Village for the Work provided pursuant to this Contract the rates set forth in its Bid.

5. PAYMENT SCHEDULE

The Contractor shall, as a condition precedent to its right to receive any payment, submit to the Village an application for payment and such receipts, vouchers, and other documents as may be necessary to establish the Contractor's payment for all labor and material and the absence of any interest whether in the nature of a lien or otherwise of any party in any property, work, or fund with respect to the Work performed hereunder. Such documents shall include, where relevant, the following forms, copies of which are attached hereto:

(i) Contractor's sworn statement;
(ii) Contractor's partial or final waiver of lien;
(iii) Subcontractor's sworn statement(s); and
(iv) Subcontractor's partial or final waiver of lien.

Payment by the Village shall be conditioned upon an inspection by the Village of the work completed and submission of required waivers by the Contractor. Payment by the Village shall in no way constitute a waiver of, or relieve the Contractor from, any

defects in the work. All payments shall be made in accordance with the Illinois Local Government Prompt Payment Act, 50 ILCS 505/1 *et seq.* Final payment for any Work performed by the Contractor pursuant to an invoice by the Contractor shall be made by the Village to the Contractor when the Contractor has fully performed the work and the work has been approved by the Village and submission of required waivers and paperwork by Contractor. Approval of the work and issuance of the final payment by the Village shall not constitute a waiver of, or release the Contractor from, any defects in the work.

The Village shall have the right to withhold from any payment due hereunder such amount as may reasonably appear necessary to compensate the Village for any actual or prospective loss due to Work which is defective or does not conform to the Contract Documents; damage for which the Contractor is liable hereunder; liens or claims of liens; claims of third parties, subcontractors, or material men; or any failure of the Contractor to perform any of its obligations under this Contract. The Village may apply any money withheld or due Contractor hereunder to reimburse itself for any and all costs, expenses, losses, damages, liabilities, suits, judgments, awards, and attorney's fees incurred, suffered, or sustained by the Village and chargeable to the Contractor.

6. TERMINATION

The Village may terminate this Contract for cause, which includes but is not necessarily limited to, the Contractor's failure to perform the work pursuant to this Contract. The Village shall provide the Contractor with five (5) days' written notice of a termination for cause pursuant to the provisions of Section 12 below. The Village may also terminate this Contract when it determines the same to be in its best interests by giving fourteen (14) days' written notice to the Contractor pursuant to the provisions of Section 12 below. In such event, the Village shall pay to the Contractor all amounts due for the work performed up to the date of termination.

7. COMPLIANCE WITH APPLICABLE LAWS

The Contractor shall comply with all applicable laws, regulations, and rules promulgated by any federal, state, county, municipal and/or other governmental unit or regulatory body now in effect during the performance of the work. By way of example only and not as a limitation, the following are included within the scope of the laws, regulations and rules with which the Contractor must comply: all forms of Workers Compensation Laws, all terms of the equal employment opportunity rules and regulations of the Illinois Department of Human Rights, statutes relating to contracts let by units of government, and all applicable civil rights and anti-discrimination laws and regulations.

8. INDEMNIFICATION

To the fullest extent permitted by law, the Contractor shall waive any right of contribution against the Village and shall indemnify and hold harmless the Village and its officers, officials, employees, volunteers and agents from and against all claims,

damages, losses and expenses, including, but not limited to, legal fees (attorney's and paralegal's fees, expert fees and court costs) arising out of or resulting from the performance of the Contractor's work, provided that any such claim, damage, loss or expense is attributable to bodily injury, sickness, disease or death, or injury to or destruction of property, other than the work itself, including the loss of use resulting therefrom, or is attributable to misuse or improper use of trademark or copyright-protected material or otherwise protected intellectual property, to the extent it is caused in whole or in part by any wrongful or negligent act or omission of the Contractor, any subcontractor, anyone directly or indirectly employed by any of them or anyone for whose acts any of them may be liable. Such obligation shall not be construed to negate, abridge or otherwise reduce any other right to indemnity which the Village would otherwise have. The Contractor shall similarly protect, indemnify and hold and save harmless, the Village, its officers, officials, employees, volunteers and agents against and from any and all claims, costs, causes, actions and expenses, including, but not limited to, legal fees incurred by reason of the Contractor's breach of any of its obligations under, or the Contractor's default of, any provisions of this Contract. The indemnification obligations under this Section shall not be limited in any way by any limitation on the amount or type of damages, compensation, or benefits payable by or for the Contractor or any subcontractor under Workers' Compensation or Disability Benefit Acts or Employee Benefit Acts.

9. INSURANCE

The Contractor shall, at the Contractor's expense, secure and maintain in effect throughout the duration of this Contract, insurance of the following kinds and limits set forth in this Section. The Contractor shall furnish "Certificates of Insurance" to the Village before beginning Work on the Project pursuant to this Contract. All insurance policies shall be written with insurance companies licensed to do business in the State of Illinois and having a rating of at least A:VII according to the latest edition of the Best's Key Rating Guide; and shall include a provision preventing cancellation of the insurance policy unless thirty (30) days prior written notice is given to the Village. This provision shall also be stated on each Certificate of Insurance: "Should any of the above described policies be canceled before the expiration date, the issuing company shall mail fifteen thirty (30) days written notice to the certificate holder named to the left."

The limits of liability for the insurance required shall provide coverage for not less than the following amounts, or greater where required by law:

(A) **Commercial General Liability:**

i. Coverage to include Broad Form Property Damage, Contractual and Personal Injury.

ii. Limits:

General Aggregate	$ 2,000,000.00
Each Occurrence	$ 1,000,000.00
Personal Injury	$ 1,000,000.00

iii. Coverage for all claims arising out of the Contractor's operations or premises and anyone directly or indirectly employed by the Contractor.

(B) **Workers' Compensation:**

i. Workers' Compensation insurance shall be provided in accordance with the provisions of the laws of the State of Illinois, including occupational disease provisions, for all employees who perform the Work pursuant to this Contract, and if work is subcontracted pursuant to the provisions of this Contract, the Contractor shall require each subcontractor similarly to provide workers' compensation insurance. In case employees engaged in hazardous work under this Contract are not protected under the Workers' Compensation Act, the Contractor shall provide, and shall cause each subcontractor to provide, adequate and suitable insurance for the protection of employees not otherwise provided.

(C) **Comprehensive Automobile Liability:**

i. Comprehensive Automobile Liability coverage shall include all owned, hired, non-owned vehicles, and/or trailers and other equipment required to be licensed, covering personal injury, bodily injury and property damage.

ii. Limits:

Combined Single Limit $1,000,000.00

(D) **Umbrella:**

i. Limits:

Each Occurrence/Aggregate $ 5,000,000.00

(E) The Village, its officers, employees, agents and volunteers shall be named as additional insureds on all insurance policies set forth herein except Workers' Compensation. The Contractor shall be responsible for the payment of any deductibles for said insurance policies. The coverage shall contain no special limitations on the scope of protection afforded to the Village, its officers, employees, agents, and volunteers.

(F) The Contractor understands and agrees that any insurance protection required by this Contract or otherwise provided by the Contractor, shall in no way limit the responsibility to indemnify, keep and save harmless, and defend the Village, its officers, employees, agents and volunteers as herein provided.

10. GUARANTY

The Contractor warrants and guarantees that its Work provided for the Project to be performed under this Agreement, and all workmanship, materials, equipment, and supplies performed, furnished, used, or installed under this Contract, shall be free from defects and flaws in workmanship or design; shall strictly conform to the requirements of

this Contract; and shall be fit and sufficient for the purposes expressed in, or reasonably inferred from, this Contract. The Contractor further warrants and guarantees that the strength of all parts of all manufactured materials, equipment, and supplies shall be adequate and as specified and that the performance requirements of this Contract shall be fulfilled.

The Contractor shall, at no expense to the Village, correct any failure to fulfill the above guaranty that may appear at any time. In any event, the guaranty herein expressed shall not be sole and exclusive, and is additional to any other guaranty or warranty expressed or implied.

11. AFFIDAVIT OR CERTIFICATE

The Contractor shall furnish any affidavit or certificate in connection with the work covered by this Contract as required by law.

12. NOTICES

Any notice required to be given by this Contract shall be deemed sufficient if made in writing and sent by certified mail, return receipt requested, or personal service, or by facsimile transmission to the persons and addresses indicated below or to such addresses and persons as either party hereto shall notify the other party of in writing pursuant to the provisions of this Section:

To the Village:	**To the Contractor:**
Village Manager	_____
Village of Oak Park	_____
123 Madison Street	_____
Oak Park, Illinois 60302-4272	_____
Email: villagemanger@oak-park.us	Email:_____
Facsimile: (708) 358-5101	Facsimile:

Mailing of such notice as and when above provided shall be equivalent to personal notice and shall be deemed to have been given at the time of mailing.

Notice of facsimile transmission shall be effective as of date and time of facsimile transmission, provided that the notice transmitted shall be sent on business days during business hours (9:00 a.m. to 5:00 p.m. Chicago time). In the event facsimile notice transmitted during non-business hours, the effective date and time of notice is the first hour of the first business day after transmission.

13. AUTHORITY TO EXECUTE

The individuals executing this Contract on behalf of the Contractor and the Village represent that they have the legal power, right, and actual authority to bind their respective parties to the terms and conditions of this Contract.

14. EFFECTIVE DATE

The effective date of this Contract reflected above and below shall be the date that the Village Manager executes this Contract behalf of the Village.

15. ENTIRE CONTRACT; APPROVAL OF SUBCONTRACTORS

This Contract, including the documents incorporated by reference herein, sets forth the entire Contract of the parties with respect to the accomplishment of the Work. No right or interest in this Contract shall be assigned, in whole or in part, by either party without the prior written consent of the other party. The Village reserves the right to approve the use of subcontractors to complete any portion of the Work and to approve any applicable contract between the Contractor and a proposed subcontractor to perform any of the Work. This Contract shall be binding upon the parties and upon their respective heirs, executors, administrators, personal representatives, successors, and assigns, except as herein provided.

16. INDEPDENDENT CONTRACTOR

The Contractor shall have the full control of the ways and means of performing the work referred to above and that the Contractor and its employees, representatives or subcontractors are not employees of the Village, it being specifically agreed that the Contractor bears the relationship of an independent contractor to the Village. The Contractor shall solely be responsible for the payment of all salaries, benefits and costs of supplying personnel for the Work.

17. CONTRACT BOND

The Contractor, before commencing the work on the Project, shall furnish a Contract Bond. The Contract Bond shall be in an amount equal to 100% of the full amount of the Contract Sum as security for the faithful performance of its obligations pursuant to the Contract Documents and as security for the payment of all persons performing labor and furnishing materials in connection with the Contract Documents. Such bond shall be on standard AIA Documents, shall be issued by a surety satisfactory to the Village, and shall name the Village as a primary co-obligee. The Contract Bond shall become a part of the Contract Documents. The failure of Contractor to supply the required Contract Bond within ten (10) days after the Notice of Award or within such extended period as the Village may grant if the Contract Bond does not meet its approval shall constitute a default, and the Village may either award the Contract to the next lowest responsible proposer or re-advertise for Bids. A charge against the defaulting Contractor may be made for the difference between the amount of the

Contractor's Bid and the amount for which a contract for the work is subsequently executed, irrespective of whether the amount thus due exceeds the amount of the Bid guarantee.

18. GOVERNING LAW AND VENUE

This Contract shall be governed by the laws of the State of Illinois both as to interpretation and performance. Venue for any action pursuant to this Contract shall be in the Circuit Court of Cook County, Illinois.

19. AMENDMENTS AND MODIFICATIONS

This Contract may be modified or amended from time-to-time provided, however, that no such amendment or modification shall be effective unless reduced to writing and duly authorized and signed by the authorized representative of the Village and the authorized representative of the Contractor.

20. NON-WAIVER OF RIGHTS

No failure of either party to exercise any power given to it hereunder or to insist upon strict compliance by the other party with its obligations hereunder, and no custom or practice of the parties at variance with the terms hereof, nor any payment under this Contract shall constitute a waiver of either party's right to demand exact compliance with the terms hereof.

21. CONFLICT

In case of a conflict between any provision(s) of the Village's Request for Bids or the Contractor's Bid and this Contract, this Contract and the Village's Request for Bids shall control to the extent of such conflict.

22. HEADINGS AND TITLES

The headings and titles provided in this Contract are for convenience only and shall not be deemed a part of this Contract.

23. COOPERATION OF THE PARTIES

The Village and the Contractor shall cooperate in the provision of the Work to be provided by Contractor pursuant to this Contract and in compliance with applicable laws, including, but not limited to, the Illinois Freedom of Information Act, 5 ILCS 140/1 *et seq.* ("FOIA"), and the provision of any documents and information pursuant to a FOIA request. The Contractor shall provide any and all documents to the Village pursuant to a FOIA request at no cost to the Village.

24. COUNTERPARTS; FACSIMILE OR PDF SIGNATURES

This Contract may be executed in counterparts, each of which shall be considered an original and together shall be one and the same Contract. A facsimile or pdf copy of this Agreement and any signature(s) thereon will be considered for all purposes as an original.

25. CERTIFIED PAYROLL

Contractor shall be solely responsible to maintain accurate records reflecting its payroll for its employees who perform any of the Work for the Village pursuant to this Contract and shall submit certified payroll records to the Village's Director of Public Works at any time during the term of this Contract. Contractor shall provide said certified payroll records within seven (7) days upon the request of the Director of Public Works.

26. PREVAILING WAGE

Contractor and any applicable subcontractor shall pay prevailing wages as established by the Illinois Department of Labor and determined by the Village for each craft or type of work needed to execute the contract in accordance with the Illinois Prevailing Wage Act, 820 ILCS 130/0.01 *et seq.* ("Act"). Contractor shall prominently post the current schedule of prevailing wages at the Project site(s) and shall notify immediately in writing all of its subcontractors of all changes in the schedule of prevailing wages. Any increases in costs to Contractor due to changes in the prevailing rate of wage during the terms of any Contract shall be at the sole expense of Contractor and not at the expense of the Village, and shall not result in an increase to the Contract Price. Contractor shall be solely responsible to maintain accurate records as required by the Act and shall submit certified payroll records to the Village evidencing its compliance with the Act on no less than a monthly basis as required by the Act. Contractor shall be solely liable for paying the difference between prevailing wages and any wages actually received by laborers, workmen and/or mechanics engaged in the Work for the Project.

Contractor shall indemnify, hold harmless, and defend the Village, its officers, officials, employees, agents and volunteers ("Indemnified Parties") against all regulatory actions, complaints, damages, claims, suits, liabilities, liens, judgments, costs and expenses, including reasonable attorney's fees, which may in any way arise from or accrue against the Indemnified Parties as a consequence of noncompliance with the Act or which may in any way result therefrom, including a complaint by the Illinois Department of Labor under Section 4(a-3) of the Act, 820 ILCS 130/4(a-3) that any or all of the Indemnified Parties violated the Act by failing to give proper notice to the Grantee or any other party performing work on the Public Improvements that not less than the prevailing rate of wages shall be paid to all laborers, workers and mechanics performing Work on the Project, including interest, penalties or fines under Section 4(a-3). The indemnification obligations of this section on the part of Contractor shall survive the termination or expiration of this Agreement. In any such claim, complaint or action against the Indemnified Parties, Contractor shall, at its own expense, appear, defend and pay all

charges of reasonable attorney's fees and all reasonable costs and other reasonable expenses arising therefrom or incurred in connection therewith, and, if any judgment or award shall be rendered against the Indemnified Parties in any such action, Contractor shall at its own expense, satisfy and discharge such judgment or award.

[REMAINDER OF PAGE INTENTIONALLY LEFT BLANK -
SIGNATURE PAGE FOLLOWS]

IN WITNESS WHEREOF, the parties hereto have caused this Contract to be signed by their duly authorized representatives on the days and dates set forth below.

VILLAGE OF OAK PARK

_____
By:
Its: Village Manager

Date: _____, 2022

ATTEST

_____
By:
Its: Village Clerk

Date: _____, 2022

CONTRACTOR

_____
By:
Its:

Date: _____, 2022

ATTEST

_____
By:
Its:

Date: _____, 2022

SECTION 01 10 00

SUMMARY

PART 1 GENERAL

1.1 SECTION INCLUDES

A. Related Documents.

B. Contract Description.

C. Scheduling of Work.

D. Construction Schedule.

E. Construction Sequence.

F. Contractor's Use of Site.

G. Owner Occupancy.

H. Specification Conventions.

1.2 RELATED DOCUMENTS

A. Documents related to the Work include:
   1. Contract Drawings
   2. General Provisions of the Contract including General and Supplementary Conditions
   3. All other Sections included herein as part of the Project Manual
   4. Addendum to the Drawings and Project Manual issued during Bidding

1.3 CONTRACT DESCRIPTION

A. Work of the Project includes the following:
   1. Selective demolition and disposal.
   2. Removal of existing boiler equipment including pump, piping and accessories.
   3. Installation of new boiler equipment including pump, piping and accessories.

B. The Contract Documents indicate the Work of the contract and related requirements and conditions that have an impact on the Work. Related requirements and conditions that are indicated on the Contract Documents include, but are not necessarily limited to the following:
   1. Existing site conditions and restrictions on use of the Site.

1.4 SCHEDULING OF WORK

A. Scheduling of Work
   1. With the exception of work listed in this Section, the Contractor may schedule his work in any manner he deems appropriate to complete the contract within the time allowed. The Contractor is cautioned that some of the work may have to be performed during other than normal working hours and that the Owner may revise the schedule whenever the Owner finds it necessary to maintain work progression, or to protect the Owner's facility, or to maintain continuous, satisfactory operation of existing facilities.
   2. The Contractor shall submit a Construction Progress Schedule as required in Section 01 32 16. The Contractor alternatives to the construction sequence described below. Alternatives that

reduce the number and duration of shutdowns and coordination requirements or would reduce the risk of possible safety problems or plant operational problems which might occur will be considered for approval.

3. The date on which the contract time starts (date of the Notice to Proceed) is anticipated to be July 2022. The contract documents describe allowed contract time based on completion dates required. If the Contractor elects to submit a Construction Progress Schedule that shows an early completion for the project, it does so at its own risk and such a submission does not change the milestone completion dates contained in the contract documents. Moreover, the Owner will not accept any responsibility for nor be held liable for any damages allegedly caused by the Contractor's failure to complete the project within its proposed early completion schedule.
4. The construction sequence as defined by this Section has been developed in part to minimize the impacts of construction work on the continuous operation of the wastewater treatment plant. The construction sequence has also been developed in part to minimize the impacts of plant operations on the construction work. These concerns have resulted in a complex construction sequence to be accomplished in a relatively short period of time. Because of this, the Contractor is cautioned that completion of this project within the time frame allowed may require highly efficient construction management, extraordinary construction efforts, and/or innovative construction techniques.
5. The Contractor is responsible for the means and methods necessary to accomplish the work in compliance with the specified criteria. Access must be maintained for personnel and equipment to enter and maintain the facility at all times. All shut-downs must be coordinated with the Owner a minimum of 72 hours prior. All shut-downs must occur during low flow periods as defined by the Owner.

B. Coordination with Others
1. The Owner will attempt to keep the Contractor informed of changes to existing contracts and award of subsequent contracts that may affect the Contractor. Schedules of operations for other contractors working with the wastewater treatment plant will be made available to the Contractor upon request.

1.5 CONSTRUCTION SCHEDULE

A. The work described in this Section shall be shown in the Construction Progress Schedule specified in Section 01 32 16. All construction steps, procedures and temporary facilities shall be approved by the Owner prior to implementation by the Contractor. The monthly updates of the Schedule of Construction shall show any changes in the proposed work, including proposed shutdown work.

B. The completion schedule for this contract requires timely transmittal of contract submittals for review by the Engineer. The identification and transmittal of all submittals required for completion of the phase of work described above is the Contractor's responsibility.

C. The Contractor shall be held responsible for all direct and indirect delays resulting from the Contractor's failure to identify and transmit the submittals required to successfully complete the contract work within the time specified.

D. The following early submittals shall be submitted within ten days after Notice to Proceed:
1. CPM Construction Schedule
2. Health and Safety Plan

1.6 CONSTRUCTION SEQUENCE

A. To be determined

1.7 CONTRACTOR'S USE OF SITE

A. Limit use of site and premises to allow:

1. Owner occupancy.

B. Construction Operations: Construction operations to be coordinated with the Owner.

C. Time Restrictions for Performing Work: Work hours are to be coordinated with the Owner.

D. Utility Outages and Shutdown are to be coordinated with the Owner.

1.8 OWNER OCCUPANCY

A. The Owner will occupy the premises during the entire period of construction for the conduct of normal operations.

B. Cooperate with Owner to minimize conflict, and to facilitate Owner's operations.

C. Schedule the Work to accommodate Owner occupancy.

1.9 SPECIFICATION CONVENTIONS

A. These specifications are written in imperative mood and streamlined form. This imperative language is directed to the Contractor, unless specifically noted otherwise. The words “shall be” are included by inference where a colon (:) is used within sentences or phrases.

PART 2 PRODUCTS - Not Used

PART 3 EXECUTION - Not Used

END OF SECTION

SECTION 01 29 76

PAYMENT PROCEDURES

PART 1 GENERAL

1.1 SECTION INCLUDES

A. Related documents

B. Payment requests

1.2 PAYMENT REQUESTS

A. General: Except as otherwise indicated, the progress payment cycle is to be regular. Each application must be consistent with previous applications and payments. Certain applications for payment, such as the initial application, the application at substantial completion, and the final payment application involve additional requirements.

1. Waivers of Lien: For each payment application, submit waivers of lien from every entity (including Contractor) who could lawfully and possibly file a lien in excess of $1,000 arising out of the Contract, and related to work covered by the payment. Submit partial waivers for the amount requested, prior to deduction or retainage, on each item. When the application shows completion of an item, submit final or full waivers. The Owner reserves the right to designate which entities involved in the work must submit waivers.
2. Waiver Delays: Each progress payment must be submitted with Contractor's waiver for the period of construction covered by the application. At the Contractor's option, each progress payment may be submitted with waivers from the subcontractors or sub-subcontractors and suppliers for the previous period of construction covered by the previous application. The final payment application must be submitted together with or preceded by final or complete waivers from every entity involved with performance of the work covered by the payment request.
3. Waiver Forms: Submit waivers on forms, and executed in a manner, acceptable to Owner.
4. Sworn Statement: Each progress payment must be submitted with a sworn statement showing subcontractors and material suppliers and the payment status of each. Form of the sworn statement shall be subject to approval of the Owner.

B. Payment Application Times: The "date" for each progress "payment" is as indicated in Owner-Contractor Agreement or, if none is indicated therein, it is the 15th day of each month. The period of construction work covered by each payment request is period indicated in Owner-Contractor Agreement or, if none is indicated therein, it is period ending 15 days prior to date for each progress payment, and starting day following end of preceding period. Dates shall be confirmed at the preconstruction meeting.

C. Application Preparation: Except as otherwise indicated, complete every entry provided for on the form, including notarization and execution by authorized persons. Incomplete applications will be returned by Owner without action. Listing must include amounts of change orders issued prior to last day of the "period of construction" covered by application.

D. Initial Payment Application: The principal administrative actions and submittals which must precede or coincide with submittal of contractor's first payment application can be summarized as follows, but not necessarily by way of limitation:

1. Schedule of Values
2. Schedule of Submittals (Section 01 33 00).

3. Listing of Contractor's staff assignments.
4. Waiver of Lien and Sworn Statement.

E. Monthly Payment Application: The principal administrative actions and submittals which must precede or coincide with submittal of contractor's first payment application can be summarized as follows, but not necessarily by way of limitation:
1. Updated Network Diagram Schedule (Section 01 32 16).
2. Revised Schedule of Submittals (Section 01 33 00), if applicable.
3. Updated listing of Contractor's staff assignments, if applicable.
4. Waiver of Lien, Including Subcontractor Lien Waivers, and Sworn Statement.
5. Demonstrated compliance with prevailing wage rates using certified payroll.

F. Application at Time of Final Completion: Following issuance of Owner's final "certificate of substantial completion", and also in part as applicable to prior certificates on portions of completed work as designated, a "special" payment application may be prepared and submitted by Contractor. The principal administrative actions and submittals which must proceed or coincide with such special applications can be summarized as follows, but not necessarily by way of limitation:
1. Warranties (guarantees), maintenance agreements and similar provisions of contract documents.
2. Test records, maintenance instructions, start-up performance reports, and similar change-over information germane to Owner's occupancy, use, operation and maintenance of completed work.
3. Final cleaning of the work.
4. Application for reduction (if any) of retainage, and consent of surety.
5. Advice to Owner on coordination of shifting insurance coverages, including proof of extended coverages as required.
6. Listing of Contractor's incomplete work, recognized as exceptions to Engineer's certificate of substantial completion.
7. Compact disc with project photos.

G. Final Payment Application: The administrative actions and submittals which must precede or coincide with submittal of contractor's final payment application can be summarized as follows, but not necessarily by way of limitation:
1. Completion of project closeout requirements.
2. Completion of items specified for completion beyond time of substantial completion (regardless of whether special payment application was previously made).
3. Assurance, satisfactory to Owner, that unsettled claims will be settled and that work not actually completed and accepted will be completed without undue delay.
4. Transmittal of required project construction records to Owner.
5. Proof, satisfactory to Owner, taxes, fees and similar obligations of Contractor have been paid.
6. Removal of temporary facilities, services, surplus materials, rubbish and similar elements.
7. Consent of surety for final payment.

H. Application Transmittal: Submit 3 executed copies of each payment application, one copy of which is completed with waivers of lien, sworn statement and similar attachments. Transmit each copy with a transmittal form listing those attachments, and recording appropriate information related to application in a manner acceptable to Owner. Transmit to Owner by means ensuring receipt within 24 hours.

PART 2 PRODUCTS – Not Used

PART 3 EXECUTION – Not Used

END OF SECTION

SECTION 01 30 00

ADMINISTRATIVE REQUIREMENTS

PART 1 GENERAL

1.1 SECTION INCLUDES

A. Coordinating interruptions in Owner's operations.

B. Coordination and project conditions.

C. Special reports.

D. Field surveys.

E. Preconstruction meeting.

F. Progress meetings.

G. Weekly report.

H. Cutting and patching.

I. Special procedures.

J. Cleaning and protection.

K. Conservation.

1.2 COORDINATING INTERRUPTIONS IN OWNER'S OPERATIONS

A. Show all anticipated operational interruptions of the Owner's facilities on the progress schedule.

B. Coordinate all operational interruptions with the Owner at least 48 hours prior to commencing with the work. The Owner may require that the Contractor reschedule work as required to maintain the operation of their facilities.

C. Except as specified herein, all operations must be maintained during construction. The Contractor is responsible for all, temporary electrical, and temporary communications that are necessary to continue the Owner's operation of their facilities.

1.3 COORDINATION AND PROJECT CONDITIONS

A. Coordinate scheduling, submittals, and Work of various sections of Project Manual to ensure efficient and orderly sequence of installation of interdependent construction elements.

B. Verify utility requirements and characteristics of operating equipment are compatible with utilities. Coordinate work of various sections having interdependent responsibilities for installing, connecting to, and placing in service, operating equipment.

C. Coordinate space requirements, supports, and installation of mechanical and electrical Work indicated diagrammatically on Drawings. Follow routing shown for pipes, ducts, and conduit, as closely as practicable; place runs parallel with lines of building. Utilize spaces efficiently to maximize accessibility for other installations, for maintenance, and for repairs.

D. In finished areas except as otherwise indicated, conceal pipes, ducts, and wiring within construction. Coordinate locations of fixtures and outlets with finish elements.

E. Coordinate completion and clean-up of Work of separate sections in preparation for Substantial Completion and for portions of Work designated for Owner's occupancy.

F. During Owner occupancy of premises, coordinate access to site for correction of defective Work and Work not in accordance with Contract Documents, to minimize disruption of Owner's activities.

G. Limitations on construction area usage as well as specific requirements that impact utilization are indicated by Contract Documents. Schedule deliveries so as to minimize space and time requirements for storage of materials and equipment on construction area.

1.4 SPECIAL REPORTS

A. Existing Conditions: Submit photographs of all existing conditions prior to start of construction. Each photograph must include location and description including room number or reference point.

B. Accident Reports: Prepare and submit reports of significant accidents, at site and anywhere else work is in progress. Record and document data and actions. For this purpose, a significant accident is defined to include events where personal injury is sustained, or property loss of substance is sustained, or where the event posed a significant threat of loss or personal injury.

1.5 FIELD SURVEYS

A. Before proceeding with the layout of actual work, verify the layout information shown on the drawings, in relation to the design survey, existing structures and features.

B. Provide field engineering services. Establish elevations, lines, and levels, utilizing recognized engineering survey practices.

1.6 PRECONSTRUCTION MEETING

A. Engineer will schedule an initial progress meeting with the Contractor and Owner, recognized as the preconstruction meeting, after Notice of Award.

B. The preconstruction meeting will be an organizational meeting. Agenda items may include:
1. Execution of Owner-Contractor Agreement.
2. Submission of executed bonds and insurance certificates.
3. Distribution of Contract Documents.
4. Submission of list of Subcontractors, list of products, schedule of values, and progress schedule.
5. Designation of personnel representing parties in Contract and Engineer.
6. Procedures and processing of field decisions, submittals, substitutions, applications for payments, proposal request, Change Orders, and Contract closeout procedures.
7. Scheduling.
8. Use of premises by Owner and Contractor.
9. Owner's requirements.
10. Survey and layout.
11. Security and housekeeping procedures.
12. Application for payment procedures.
13. Procedures for testing.
14. Procedures for maintaining record documents.
15. Requirements for start-up of equipment.
16. Inspection and acceptance of equipment put into service during construction period.

1.7 PROGRESS MEETINGS

A. In addition to other project meetings held for other purposes, hold a general progress meeting with the Engineer and Owner throughout progress of the Work at monthly intervals.

B. The schedule of the progress meetings will be determined during the preconstruction meeting. In general, progress meetings will be coordinated with preparation of the payment request.

C. Review each entity's present and future needs including interface requirements, time, sequences, deliveries, access, site utilization, temporary facilities and services, hours of work, hazards and risks, housekeeping, change orders, and documentation of information for payment requests. Discuss whether each element of current work is ahead of schedule, on time, or behind schedule in relation with updated progress schedule. Determine how behind-schedule work will be expedited, and secure commitments from entities involved in doing so. Discuss whether schedule revisions are required to ensure that current work and subsequent work will be completed within Contract Time. Review everything of significance which could affect progress of the work.

D. Updating Schedules: Immediately following each progress meeting, where revisions to progress schedule have been made or recognized, revise and reissue progress schedule as described in Section 01 33 00.

E. Attendance Required: Job superintendent, major subcontractors and suppliers, and others as appropriate to agenda topics for each meeting.

F. Agenda:
   1. Review minutes of previous meetings, if applicable.
   2. Review of Work progress.
   3. Field observations, problems, and decisions.
   4. Identification of problems impeding planned progress.
   5. Review of submittals schedule and status of submittals.
   6. Review of off-site fabrication and delivery schedules.
   7. Maintenance of progress schedule.
   8. Corrective measures to regain projected schedules.
   9. Planned progress during succeeding work period.
   10. Coordination of projected progress.
   11. Maintenance of quality and work standards.
   12. Effect of proposed changes on progress schedule and coordination.
   13. Other business relating to Work.

PART 2 PRODUCTS - Not Used

PART 3 EXECUTION

3.1 CUTTING AND PATCHING

A. Employ skilled and experienced installer to perform cutting and patching.

B. Submit written request in advance of cutting or altering elements affecting:
   1. Structural integrity of element.
   2. Integrity of weather-exposed or moisture-resistant elements.
   3. Efficiency, maintenance, or safety of element.
   4. Visual qualities of sight exposed elements.
   5. Work of Owner or separate contractor.

C. Execute cutting, fitting, and patching to complete Work, and to:
   1. Fit the several parts together, to integrate with other Work.
   2. Uncover Work to install or correct ill-timed Work.
   3. Remove and replace defective and non-conforming Work.
   4. Remove samples of installed Work for testing.
   5. Provide openings in elements of Work for penetrations of mechanical and electrical Work.

D. Execute work by methods to avoid damage to other Work, and to provide proper surfaces to receive patching and finishing.

E. Cut masonry and concrete materials using masonry saw or core drill.

F. Restore Work with new products in accordance with requirements of Contract Documents.

G. Fit Work tight to pipes, sleeves, ducts, conduit, and other penetrations through surfaces.

H. Maintain integrity of wall, ceiling, or floor construction; completely seal voids.

I. Refinish surfaces to match adjacent finishes. For continuous surfaces, refinish to nearest intersection; for assembly, refinish entire unit.

J. Identify hazardous substances or conditions exposed during the Work to Engineer for decision or remedy.

3.2 SPECIAL PROCEDURES

A. Materials: As specified in product sections, match existing with new products for patching and extending work.

B. Employ skilled and experienced installers to perform work.

C. Cut, move, or remove items as necessary for access to alterations and renovation Work. Replace and restore at completion.

D. Remove unsuitable material not marked for salvage, including rotted wood, corroded metals, and deteriorated masonry and concrete. Replace materials as specified for finished Work.

E. Remove debris and abandoned items from area and from concealed spaces.

F. Prepare surface and remove surface finishes to permit installation of new work and finishes.

G. Close openings in exterior surfaces to protect existing work from weather and extremes of temperature and humidity.

H. Remove, cut, and patch Work in manner to minimize damage and to permit restoring products and finishes to original or specified condition.

I. Refinish existing visible surfaces to remain in renovated rooms and spaces, to specified condition for each material, with neat transition to adjacent finishes.

J. Where new Work abuts or aligns with existing, provide smooth and even transition. Patch Work to match existing adjacent Work in texture and appearance.

K. When finished surfaces are cut so that smooth transition with new Work is not possible, terminate existing surface along straight line at natural line of division and submit recommendation to Engineer for review.

L. Where change of plane of ¼ inch or more occurs, submit recommendation for providing smooth transition; to Engineer for review

M. Patch or replace portions of existing surfaces which are damaged, lifted, discolored, or showing other imperfections.

N. Finish surfaces as specified in individual product sections.

3.3 CLEANING AND PROTECTION

A. General: During handling and installation of work at the project site, clean and protect work in progress and adjoining work on the basis of continuous maintenance.

B. Limiting Exposures of Work: To the extent possible through reasonable control and protection methods, supervise performance of the work in such a manner and by such means which will ensure that none of the work, whether completed or in progress, will be subjected to harmful, dangerous, damaging or otherwise deleterious exposure during the construction period. Such exposures include, where applicable, but not by way of limitation the following:
1. Water or ice.
2. Solvents.
3. Chemicals.
4. Light.
5. Puncture.
6. Abrasion.
7. Heavy traffic.
8. Misalignment.
9. Excessive weathering.
10. Unprotected storage.
11. Improper shipping or handling.
12. Theft.
13. Vandalism.

3.4 CONSERVATION

A. It is a requirement for supervision and administration of the work that construction operations be carried out with the maximum possible consideration given to conservation of energy, water and materials.

END OF SECTION

SECTION 01 33 00

SUBMITTAL PROCEDURES

PART 1 GENERAL

1.1 SECTION INCLUDES

A. Submittal procedures.

B. Owner's/Engineer's Action.

C. Proposed products list.

D. Product data.

E. Shop drawings.

F. Design data.

G. Test reports.

H. Certificates.

I. Manufacturer's instructions.

J. Operation and Maintenance manuals.

K. Manufacturer's field reports.

L. Construction photographs.

1.2 SUBMITTAL PROCEDURES

A. Transmit each submittal with Engineer accepted form.

B. Sequentially number transmittal forms. Mark revised submittals with original number and sequential alphabetic suffix.

C. Identify Project, Contractor, subcontractor and supplier; pertinent drawing and detail number, and specification section number, appropriate to submittal.

D. Apply Contractor's stamp, signed or initialed certifying that review, approval, verification of products required, field dimensions, adjacent construction Work, and coordination of information is in accordance with requirements of the Work and Contract Documents.

E. Schedule submittals to expedite Project and deliver to Engineer as directed below for electronic submittals. Coordinate submission of related items.

F. For each submittal review, allow 15 days excluding delivery time to and from Contractor. Where the submittal must be held for coordination, the Engineer will so advise the Contractor.

G. Identify variations from Contract Documents and product or system limitations which may be detrimental to successful performance of completed Work.

H. Allow space on submittals for Contractor and Engineer review stamps.

I. When revised for resubmission, identify changes made since previous submission.

J. Distribute copies of reviewed submittals as appropriate. Instruct parties to promptly report inability to comply with requirements.

K. Submittals not requested will not be recognized or processed.

L. Except for samples, electronic submittals are required.

M. Electronic submittals are required to conform to all of the submittal requirements listed above.

N. Email electronic submittals to the Engineer.

O. Submit electronic documents as a single portable electronic file (.pdf). Contractor should request an exception for documents that are not sent in pdf format or are sent as multiple files. Electronic files will be rejected if they are not clearly legible.

P. Submittals delivered electronically will be returned to the Contractor as electronic files. Engineer will return:
   1. Engineer's review form and comments
   2. Contractor's transmittal form
   3. Submittal materials only if comments on the materials are required.

1.3 OWNER'S/ENGINEER'S ACTION

A. Unless otherwise noted, the Owner/Engineer will review each submittal and mark with appropriate "Action".

B. Action Stamp: The Owner/Engineer will stamp each submittal to be returned with a uniform, self-explanatory action stamp, appropriately marked and executed to indicate whether the submittal returned is for unrestricted use, final-but-restricted use (as marked), must be revised and resubmitted (use not permitted) or without action (as explained on the transmittal form).

C. Final Unrestricted Release: Where the submittals are marked as follows, the work covered by the submittal may proceed provided it complies with the requirements of the contract documents; acceptance of the work will depend upon that compliance.
   1. Marking: "No Exception Taken".

D. Final-But-Restricted Release: When the submittals are marked as follows, the work covered by the submittal may proceed provided it complies with the Owner/Engineer's notations, corrections marked on the submittal, and with the requirements of the contract documents; acceptance of the work will depend on that compliance.
   1. Marking: "Make Corrections Noted".

E. Returned to Resubmittal: When the submittal is marked as follows, do not proceed with the work covered by the submittal, including purchasing, fabrication, delivery, or other activity. Revise the submittal or prepare a new submittal in accordance with the Owner/Engineer's notations stating the reasons for returning the submittal. Repeat if necessary to obtain a different action marking. Do not permit submittals with the following marking to be used at the project site, or elsewhere where work is in progress.
   1. Marking:
      a. "Rejected".
      b. "Revise and Resubmit".
      c. "Submit Specified Item."

1.4 PROPOSED PRODUCTS LIST

A. Within 15 days after date of Notice to Proceed, submit list of major products proposed for use, with name of manufacturer, trade name, and model number of each product.

B. For products specified only by reference standards, give manufacturer, trade name, model or catalog designation, and reference standards.

1.5 PRODUCT DATA

A. Information required specifically as product date includes manufacturer's standard printed recommendations for application and use, compliance with recognized standards of trade associations and testing agencies, and the application of their labels and seals (if any), special notation of dimensions which have been verified by way of field measurement, and special coordination requirements for interfacing the material, product or system with other work.

B. Collect required product data into a single submittal for each unit of work or system. Mark each copy to show which choices and options are applicable to the project. Where product data has been printed to include information on several similar products, some of which are not required for use on the project, or are not included in this submittal, mark the copies to show clearly that such information is not applicable.

C. Submit to Engineer for review for limited purpose of checking for conformance with information given and design concept expressed in Contract Documents. Product data submittal is required for information and record and to determine that the products, materials and systems comply with the provisions of the contract documents. Therefore, the initial submittal is also the final submittal, except where the Engineer observes that there is non-compliance with the provisions of the contract documents and returns the submittal to the Contractor marked with the appropriate "Action".

D. Unless submitted electronically, submit number of copies Contractor requires, plus three copies Engineer will retain.

E. Mark each copy to identify applicable products, models, options, and other data. Supplement manufacturers' standard data to provide information specific to this Project.

F. Where product data must be specially prepared for required products, materials or systems, because standard printed data is not suitable for use, submit data as "shop drawings" and not as "product data".

G. Indicate product utility and electrical characteristics, utility connection requirements, and location of utility outlets for service for functional equipment and appliances.

H. After review, produce copies and distribute in accordance with SUBMITTAL PROCEDURES article and for record documents described in Section 01 70 00 - Execution and Closeout Requirements.

1.6 SHOP DRAWINGS

A. Shop Drawings: Submit to Engineer for review for limited purpose of checking for conformance with information given and design concept expressed in Contract Documents.

B. Indicate special utility and electrical characteristics, utility connection requirements, and location of utility outlets for service for functional equipment and appliances.

C. When required by individual specification sections, provide shop drawings signed and sealed by professional engineer responsible for designing components shown on shop drawings.
   1. Include signed and sealed calculations to support design.

2. Submit drawings and calculations in form suitable for submission to and approval by authorities having jurisdiction.

D. Make revisions and provide additional information when required by authorities having jurisdiction.

E. Information required on shop drawings includes, dimensions, identification of specific products and materials which are included in the work, compliance with specified standards and notations of coordination requirements with other work. Provide special notation of dimensions that have been established by field measurement. Highlight, encircle or otherwise indicate deviations from the contract documents on the shop drawings.

F. Do not permit shop drawing copies without an appropriate final "Action" marking by the Engineer to be used in connection with the work.

G. Unless submitted electronically, submit number of opaque reproductions Contractor requires, plus three copies Engineer will retain.

H. After review, produce copies and distribute in accordance with SUBMITTAL PROCEDURES article and for record documents described in Section 01 70 00 - Execution and Closeout Requirements.

1.7 DESIGN DATA

A. Submit for Engineer's knowledge as contract administrator or for Owner.

B. Submit for information for limited purpose of assessing conformance with information given and design concept expressed in Contract Documents.

C. Unless submitted electronically, submit number of opaque reproductions Contractor requires, plus three copies Engineer will retain.

1.8 TEST REPORTS

A. Submit for Engineer's knowledge as contract administrator or for Owner.

B. Submit test reports for information for limited purpose of assessing conformance with information given and design concept expressed in Contract Documents.

C. Unless submitted electronically, submit number of opaque reproductions Contractor requires, plus three copies Engineer will retain.

1.9 CERTIFICATES

A. When specified in individual specification sections, submit certification by manufacturer, installation/application subcontractor, or Contractor to Engineer, in quantities specified for Product Data.

B. Indicate material or product conforms to or exceeds specified requirements. Submit supporting reference data, affidavits, and certifications as appropriate.

C. Certificates may be recent or previous test results on material or Product, but must be acceptable to Engineer.

D. Unless submitted electronically, submit number of opaque reproductions Contractor requires, plus three copies Engineer will retain.

1.10 MANUFACTURER'S INSTRUCTIONS

A. When specified in individual specification sections, submit printed instructions for delivery, storage, assembly, installation, start-up, adjusting, and finishing, to Engineer for delivery to Owner in quantities specified for Product Data.

B. Indicate special procedures, perimeter conditions requiring special attention, and special environmental criteria required for application or installation.

1.11 MANUFACTURER'S OPERATION AND MAINTENANCE MANUALS

A. Obtain installation, operation, and maintenance manuals from manufacturers and suppliers for each item of equipment furnished under the Contract. Submit three copies of each complete manual to the Owner within 90 days after approval of shop drawings, product data, and samples and not later than the date of shipment of each item of equipment to the project site.

B. Manuals shall be provided for each piece of equipment including individual components and subsystems of complete assemblies. The section of the manual on operation shall describe the function of each component and its relationship to the system of which it is a part. Where several models, options, or styles are described, the manual shall identify the items actually provided.

C. The manual shall contain the following:
   1. An 8-1/2 x 11 inch typewritten sheet listing the manufacturer's identification, including order number, model, and serial number and location of parts and service centers.
   2. A separate 8-1/2 x 11 inch typewritten list of recommended stock of parts, including part number and quantity.
   3. Complete replacement parts list and drawings.
   4. Performance data and rating tables.
   5. Specific instructions for installation, operation, adjustment, and maintenance.

D. Each manual shall be bound in a folder and labeled to identify the contents and project to which it applies.

E. Operation and maintenance manuals specified herein are in addition to any operation, maintenance, or installation instructions required by the Contractor to install, test, and start up equipment.

1.12 MANUFACTURER'S FIELD REPORTS

A. Submit reports for Engineer's benefit as contract administrator or for Owner.

B. Unless submitted electronically, submit two copies of the report within 5 days of observation to Engineer for information.

C. Submit for information for limited purpose of assessing conformance with information given and design concept expressed in Contract Documents.

1.13 CONSTRUCTION PHOTOGRAPHS

A. Take pre-construction digital photos as evidence of existing project. The photos shall be submitted prior to working in each room.

B. With the application at time of Final Completion: Deliver compact discs with .jpg files to Owner with project record documents. Catalog and index files by room number.

1.14 SUBMITTAL SCHDULE

A. A proposed preliminary submittal schedule is attached to this Section.

B. Contractor shall submit his own Schedule of Submittals with the Initial Payment Application.

PART 2 PRODUCTS - Not Used

PART 3 EXECUTION - Not Used

END OF SECTION

SECTION 01 40 00

QUALITY REQUIREMENTS

PART 1 GENERAL

1.1 SECTION INCLUDES

A. Quality control and control of installation.

B. Tolerances.

C. References.

D. Labeling.

E. Source and quality of materials and equipment.

F. Examination.

G. Preparation.

1.2 QUALITY CONTROL AND CONTROL OF INSTALLATION

A. Monitor quality control over suppliers, manufacturers, products, services, site conditions, and workmanship, to produce Work of specified quality.

B. Comply with manufacturers' instructions, including each step in sequence.

C. When manufacturers' instructions conflict with Contract Documents, request clarification from Engineer before proceeding.

D. Comply with specified standards as minimum quality for the Work except where more stringent tolerances, codes, or specified requirements indicate higher standards or more precise workmanship.

E. Perform Work by persons qualified to produce required and specified quality.

F. Verify field measurements are as indicated on Shop Drawings or as instructed by manufacturer.

G. Secure products in place with positive anchorage devices designed and sized to withstand stresses, vibration, physical distortion, or disfigurement.

1.3 TOLERANCES

A. Monitor fabrication and installation tolerance control of products to produce acceptable Work. Do not permit tolerances to accumulate.

B. Comply with manufacturers' tolerances. When manufacturers' tolerances conflict with Contract Documents, request clarification from Engineer before proceeding.

C. Adjust products to appropriate dimensions; position before securing products in place.

1.4 REFERENCES

A. For products or workmanship specified by association, trade, or other consensus standards, complies with requirements of standard, except when more rigid requirements are specified or are required by applicable codes.

B. Conform to reference standard by date of issue current on date for receiving bids, except where specific date is established by code.

C. Obtain copies of standards where required by product specification sections.

D. When specified reference standards conflict with Contract Documents, request clarification from Engineer before proceeding.

E. Neither contractual relationships, duties, responsibilities of parties in Contract, nor those of Engineer shall be altered from Contract Documents by mention or inference otherwise in reference documents.

1.5 LABELING

A. Attach label from agency approved by authority having jurisdiction for products, assemblies, and systems required to be labeled by applicable code.

B. Label Information: Include manufacturer's or fabricator's identification, approved agency identification, and the following information, as applicable, on each label.
   1. Model number.
   2. Serial number.
   3. Performance characteristics.

1.6 SOURCE AND QUALITY OF MATERIALS AND EQUIPMENT

A. The source of materials to be used shall be in accordance with the Contract Documents and as approved by the Engineer before delivery. The approval of the source of any material shall continue as long as the material conforms to the Specifications.

B. All material not conforming to the requirements of the Specifications shall be considered as defective and shall be removed from the Work. If in place, faulty materials shall be removed by the Contractor at his expense and replaced with acceptable material unless permitted otherwise by the Owner. No defective materials which have been subsequently corrected shall be reused until approval has been given.

C. Upon failure of the Contractor to comply immediately with any order of the Engineer to remove and replace defective material, the Owner shall have authority to remove and replace defective materials, and to deduct the cost of removal and replacement from any monies due or to become due to the Contractor. Failure to reject any defective materials or work at the time of installation shall in no way prevent later rejection when such defects are discovered, nor obligate the Owner to final acceptance.

PART 2 PRODUCTS - Not Used

PART 3 EXECUTION

3.1 EXAMINATION

A. Verify existing site conditions and substrate surfaces are acceptable for subsequent Work. Beginning new Work means acceptance of existing conditions.

B. Verify existing substrate is capable of structural support or attachment of new Work being applied or attached.

C. Examine and verify specific conditions described in individual specification sections.

D. Verify utility services are available, of correct characteristics, and in correct locations.

END OF SECTION

SECTION 01 42 16

DEFINITIONS

PART 1 GENERAL

1.1 SECTION INCLUDES

A. Description of requirements.

B. Definitions.

1.2 DESCRIPTION OF REQUIREMENTS

A. This section specifies procedural and administrative requirements for compliance with governing regulations and codes and standards imposed upon the Work. These requirements include obtaining permits, licenses, inspections, releases and similar documentation, as well as payments, statements and similar requirements associated with regulations, codes and standards.
   1. The term "Regulations" is defined to include laws, statutes, ordinances and lawful orders issued by governing authorities, as well as those rules, conventions and agreements within the construction industry which effectively control the performance of the Work regardless of whether they are lawfully imposed by governing authority or not.

B. Governing Regulations: Refer to General and Supplementary Conditions for requirements related to compliance with governing regulations.

1.3 DEFINITIONS

A. General Explanation: Certain terms used in contract documents are defined in this article. Definitions and explanations contained in this section are not necessarily complete but are general for the Work to the extent that they are not stated more explicitly in another element of the contract documents.

B. General Requirements: Provisions and requirements of other Division 01 sections apply to the entire work of the Contract and, where so indicated, to other elements which are included in the project.

C. Indicated: The term "indicated" is a cross-reference to graphic representations, notes or schedules on the drawings, to other paragraphs or schedules in the specifications, and to similar means of recording requirements in contract documents. Where terms such as "shown", "noted", "scheduled", and "specified" are used in lieu of "indicated", it is for the purpose of helping the reader locate the cross-reference, and no limitation of location is intended except as specifically noted.

D. Directed, Requested, etc.: Terms such as "directed", "requested", "authorized", "selected", "approved", "required", "accepted", and "permitted" mean "directed by the Owner", "requested by the Owner", and similar phrases. However, no such implied meaning will be interpreted to extend the Owner's responsibility into the Contractor's area of construction supervision.

E. Approve: Where used in conjunction with the Engineer's response to submittals, requests, applications, inquiries, reports and claims by the Contractor, the term "approved" will be held to limitations of the Engineer's responsibilities and duties as specified in General and Supplementary Conditions. In no case will the Engineer's approval be interpreted as a release of the Contractor from responsibilities to fulfill requirements of contract documents or acceptance of the Work, unless otherwise provided by requirements of the contract documents.

F. Project Site: The term "project site" means the space available to the Contractor for performance of the Work, either exclusively or in conjunction with others performing other construction as part of the project or other projects. The extent of the project site is shown on the drawings and may or may not be identical with the description of the land upon which the project is to be built.

G. Furnish: The term "furnish" is used to mean "supply and deliver to the project site, ready for unloading, unpacking, assembly, installation, and similar operations."

H. Install: The term "install" is used to describe operations at project site including the actual "unloading, unpacking, assembly, erection, placing, applying, working to dimension, protecting, cleaning and similar operations."

I. Provide: The term "provide" means "to furnish and install, complete and ready for the intended use."

J. Installer: The "installer" is "the entity" (person or firm) engaged by the Contractor, its subcontractor or sub-subcontractor for performance of a particular element of construction at the project site, including installation, erection, application and similar required operations. It is a requirement that installers are experienced in the operations they are engaged to perform.

K. Testing Laboratories: A "testing laboratory" is an independent entity engaged to perform specific inspections or tests of the Work, either at the project site or elsewhere, and to report, and (if required) interpret results of those inspections or tests.

PART 2 PRODUCTS - Not Used

PART 3 EXECUTION - Not Used

END OF SECTION

SECTION 01 42 19

REFERENCE STANDARDS

PART 1 GENERAL

1.1 SECTION INCLUDES

A. Description of requirements.

B. Specification format and content explanation.

C. Drawing symbols.

D. Industry standards.

E. Governing regulations/authorities.

1.2 DESCRIPTION OF REQUIREMENTS

A. This section specifies procedural and administrative requirements for compliance with governing regulations and codes and standards imposed upon the Work. These requirements include obtaining permits, licenses, inspections, releases and similar documentation, as well as payments, statements and similar requirements associated with regulations, codes and standards.
   1. The term "Regulations" is defined to include laws, statutes, ordinances and lawful orders issued by governing authorities, as well as those rules, conventions and agreements within the construction industry which effectively control the performance of the Work regardless of whether they are lawfully imposed by governing authority or not.

B. Governing Regulations: Refer to General and Supplementary Conditions for requirements related to compliance with governing regulations.

1.3 SPECIFICATION FORMAT AND CONTENT EXPLANATION

A. General: This article is provided to help the user of these specifications more readily understand the format, language, implied requirements and similar conventions of content. None of the following explanations shall be interpreted to modify the substance of contract requirements.
   1. Production Methods: Portions of these specifications have been produced by editing master specifications and the standard specifications covenants applicable to construction; they may contain minor deviations from traditional writing formats. Such deviations are a natural result of this production technique, and no other meaning shall be implied.

B. Specification Format: These specifications are organized based upon the Construction Specifications Institute's 48-Division format. The organization of these specifications into Divisions, Sections or Trade Headings conforms generally to recognized industry practice.

C. Specification Content: This project specification has been produced employing certain conventions in the use of language as well as conventions regarding the intended meaning of certain terms, words, and phrases when used in particular situations or circumstances. These conventions are explained as follows:
   1. In certain circumstances, language used in specifications and other contract documents is of the abbreviated type. Implied words and meanings will be appropriately interpreted. Singular words will be interpreted as plural and plural words will be interpreted as singular where applicable and where the full context of the contract documents so indicates.

2. Imperative Language is used generally in the specifications. Requirements expressed imperatively are to be performed by the Contractor. At certain locations in the text, for clarity, contrasting subjective language is used to describe responsibilities which must be fulfilled indirectly by the Contractor, or by others when so noted.

D. Methods of Specifying: Techniques or methods of specifying requirements vary throughout the text. The method used for specifying one element of the Work has no bearing on requirements for another element of the Work.

E. Assignment of Specialists: In certain circumstances, the specification requires or implies that specific elements of the Work are to be assigned to specialists who must be engaged to perform that element of the Work. Such assignments are special requirements over which the Contractor has no choice or option. They are intended to establish which party or entity involved in a specific element of the Work is considered as being sufficiently experienced in the indicated construction processes or operations to be recognized as "expert" in those processes or operations. Nevertheless, the ultimate responsibility for fulfilling all contract requirements remains with the Contractor.
   1. These requirements should not be interpreted to conflict with the enforcement of building codes and similar regulations governing the Work. They are also not intended to interfere with local trade union jurisdictional settlements and similar conventions.

F. Trades: The use of certain titles such as "carpentry" in the specification, is not intended to imply that the Work must be performed by accredited or unionized individuals of a corresponding generic name, such as "carpenter". It also is not intended to imply that the requirements specified apply exclusively to tradespersons of that corresponding generic name.

1.4 DRAWING SYMBOLS

A. General: Except as otherwise indicated, graphic symbols used on the drawings are those symbols recognized in the construction industry for purposes indicated. Where not otherwise noted, symbols are defined by "Architectural Graphic Standards", published by John Wiley & Sons, Inc., seventh edition.

1.5 INDUSTRY STANDARDS

A. Applicability of Standards: Except where more explicit or stringent requirements are written into the contract documents, applicable construction industry standards have the same force and effect as if bound into or copied directly into the contract documents. Such industry standards are made a part of the contract documents by reference. Individual specification sections indicate which codes and standards the Contractor must keep available at the project site for reference.
   1. Referenced standards (standards referenced directly in the contract documents) take precedence over standards that are not referenced but generally recognized in the industry for applicability to the Work.
   2. Unreferenced Standards: Except as otherwise limited by the contract documents, standards not referenced but recognized in the construction industry as having direct applicability will be enforced for performance of the Work. The decision as to whether an industry code or standard is applicable, or as to which of several standards are applicable, is the sole responsibility of the Engineer.

B. Publication Dates: Except as otherwise indicated, where compliance with an industry standard is required, comply with standard in effect as of date of contract documents.
   1. Updated Standards: At the request of the Engineer, Contractor or governing authority, submit a change order proposal where an applicable industry code or standard has been revised and reissued after the date of the contract documents and before the performance of the Work affected. The Engineer will decide whether to issue a change order to proceed with the updated standard.

C. Conflicting Requirements: Where compliance with two or more standards is specified, and where these standards establish different or conflicting requirements for minimum quantities or quality levels, the most stringent requirement will be enforced, unless the contract documents specifically indicate otherwise. Refer requirements that are different, but apparently equal, and uncertainties as to which quality level is more stringent to the Engineer for a decision before proceeding.
   1. Minimum Quantities or Quality Levels: In every instance the quantity or quality level shown or specified is intended to be the minimum to be provided or performed. Unless otherwise indicated, the actual Work may either comply exactly, within specified tolerances, with the minimum quantity or quality specified, or may exceed that minimum within reasonable limits. In complying with these requirements, the indicated numeric values are minimum or maximum values, as noted, or as appropriate for the context of the requirements. Refer instances of uncertainty to the Engineer for decision before proceeding.

D. Copies of Standards: The contract documents require that each entity performing work be experienced in that part of the Work being performed. Each entity is also required to be familiar with industry standards applicable to that part of the Work. Copies of applicable standards are not bound with the contract documents.
   1. Where copies of standards are needed for proper performance of the Work, the Contractor is required to obtain such copies directly from the publication source.
   2. Although copies of standards needed for enforcement of requirements may be required submittals, the Engineer reserves the right to require the Contractor to submit additional copies as necessary for enforcement of requirements.

E. Abbreviations and Names: Trade association names and titles of general standards are frequently abbreviated. The following acronyms or abbreviations as referenced in contract documents are defined to mean the associated names. Both names and addresses are subject to change, and are believed to be, but are not assured to be, accurate and up-to-date as of date of contract documents:
   1. ANSI - American National Standards Institute, 1430 Broadway, New York, NY 10018, (212) 354-3300
   2. ASTM - ASTM, 655 Fifteenth Street NW, Washington, DC 20005, (202) 639-4025
   3. AWS - American Welding Society, P.O. Box 351040, 550 Le Jeune Road NW, Miami, FL 33135, (305) 443-9353

F. Federal Government Agencies: Names and titles of federal government standard or specification producing agencies are frequently abbreviated. The following acronyms or abbreviations as referenced in the contract documents indicate names of standard or specification producing agencies of the federal government. Names and addresses are subject to change but are believed to be, but are not assured to be, accurate and up-to-date as of the date of the contract documents.
   1. EPA - Environmental Protection Agency, 401 M Street SW, Washington, DC 20460, (202) 829-3535
   2. OSHA - Occupational Safety and Health Administration (U.S. Department of Labor), Government Printing Office, Washington, DC 20402, (202) 783-3238

1.6 GOVERNING REGULATIONS/AUTHORITIES

A. General: The procedure followed has been to contact governing authorities where necessary to obtain information needed for the purpose of preparing contract documents; recognizing that such information may or may not be of significance in relation to the Contractor's responsibilities for performing the Work. Contact governing authorities directly for necessary information and decisions having a bearing on performance of the Work.

PART 2 PRODUCTS - Not Used

PART 3 EXECUTION - Not Used

END OF SECTION

SECTION 01 50 00

TEMPORARY FACILITIES AND CONTROLS

PART 1 GENERAL

1.1 SECTION INCLUDES

A. Temporary Utilities:
   1. Temporary electricity.
   2. Telephone service.
   3. Temporary sanitary facilities.

B. Construction Facilities:
   1. Field offices and sheds.
   2. Vehicular access, Parking, and Paved Area Use.
   3. Progress cleaning and waste removal.

C. Temporary Controls:
   1. Barriers.
   2. Security.

D. Construction Aids:
   1. Material hoists and cranes.
   2. Temporary runways, scaffolding, and ladders.
   3. Temporary chutes.

E. Removal of utilities, facilities, and controls.

1.2 TEMPORARY ELECTRICITY

A. Owner will pay cost of energy used. Exercise measures to conserve energy. Utilize Owner’s existing power service.

B. Do not disrupt Owner's use of service.

C. Complement existing power service capacity and characteristics as required for construction operations.

D. If temporary wiring interferes with construction or the Owner’s operation of the facility, it shall be relocated.

E. Permanent convenience receptacles may be utilized during construction.

F. When temporary service is no longer needed, remove all temporary electrical facilities from the site.

1.3 TELEPHONE SERVICE

A. The Contractor’s project manager and foreman shall be accessible by cellular phone to the Engineer and Owner during normal construction hours. Provide a 24-hour emergency contact number for the duration of the project.

1.4 TEMPORARY SANITARY FACILITIES

A. Specific existing restroom facilities shall be designated for Contractor use. If the owner deems that this privilege has been abused, the Contractor shall provide enough chemical toilets to conveniently serve the needs of all Contractor personnel.

B. Chemical toilets and their maintenance shall meet the requirements of State and local health regulations and ordinances. Any facilities or maintenance methods failing to meet these requirements shall be corrected immediately.

C. At end of construction, return existing facilities used for construction operations to same or better condition as original condition.

1.5 FIELD OFFICES AND SHEDS

A. Storage Areas: With permission from the City, the Contractor may utilize existing facility/areas for storage.

B. Removal: At completion of Work remove all tools, accessories and debris. Restore areas.

1.6 VEHICULAR ACCESS, PARKING, AND PAVED AREA USE

A. Use designated existing on-site roads for construction traffic.

B. Use of designated existing on-site streets and driveways used for construction traffic and parking is permitted. Tracked vehicles not allowed on paved areas.

C. Do not allow heavy vehicles or construction equipment in parking areas.

D. Maintenance:
   1. Maintain traffic and parking areas in sound condition free of excavated material, construction equipment, products, mud, snow, and ice.

1.7 PROGRESS CLEANING AND WASTE REMOVAL

A. Maintain areas free of waste materials, debris, and rubbish. Maintain site in clean and orderly condition.

B. Remove debris and rubbish from pipe chases, plenums, attics, crawl spaces, and other closed or remote spaces, prior to enclosing spaces.

C. Broom and vacuum clean interior areas prior to start of surface finishing and continue cleaning to eliminate dust.

D. Collect and remove waste materials, debris, and rubbish from site as needed and dispose off-site.

1.8 BARRIERS

A. Replace damaged grass.

B. Protect non-owned vehicular traffic, stored materials, site, and structures from damage.

1.9 SECURITY

A. Security Program:

1. Protect Work from theft, vandalism, and unauthorized entry.
2. Initiate program in coordination with Owner's existing security system at project mobilization.
3. Maintain program throughout construction period until Owner acceptance precludes need for Contractor security.

1.10 MATERIAL HOISTS AND CRANES

A. Provide material hoists required for normal use by all trades and employ skilled hoist operators. Provide all necessary guards, signals, safety devices, etc., required for safe hoist operation. The construction and operation of material hoists shall be in accordance with the applicable ANSI Standards, the "Manual Code of Accident Prevention in Construction" of the Associated General Contractors of America, OSHA, and of other Federal, State, and municipal codes or ordinances. The Contractor shall prohibit the use of hoists for transporting personnel. Hoists shall be located to avoid risk of damage to completed work.

B. Special rigging and hoisting facilities shall be provided by each trade requiring their use.

1.11 TEMPORARY RUNWAYS, SCAFFOLDING, AND LADDERS

A. Provide temporary ladders, ramps, and runways as required for performance and inspection of the work. The above facilities shall be constructed and maintained in accordance with the applicable Federal, State, and Municipal regulations and codes.

B. Furnish, erect, and maintain all scaffolding required for this work. Scaffolding shall be constructed and maintained in accordance with applicable State and Federal laws and local ordinances. Scaffolding shall be promptly removed after serving its purpose.

C. The structural strength and safety of scaffolding, runways, covers, railings, ladders, stairs, etc., and compliance with law shall be the sole responsibility of the Contractor.

1.12 TEMPORARY CHUTES

A. No materials shall be dropped from structures except through enclosed wooden or metal chutes which shall be provided and maintained as required for the performance of the work by the various trades.

1.13 REMOVAL OF UTILITIES, FACILITIES, AND CONTROLS

A. Remove temporary utilities, equipment, facilities, materials, prior to Substantial Completion or as soon as the Engineer deems permissible.

B. Clean and repair damage caused by installation or use of temporary work.

C. Restore existing and permanent facilities used during construction to original condition. Restore permanent facilities used during construction to specified condition.

D. Surfacing and sub-base material used for temporary road and parking areas shall be removed, unless otherwise directed by the Engineer.

PART 2 PRODUCTS - Not Used

PART 3 EXECUTION - Not Used

END OF SECTION

SECTION 01 60 00

PRODUCT REQUIREMENTS

PART 1 GENERAL

1.1 SECTION INCLUDES

A. Products.

B. Product delivery requirements.

C. Product storage and handling requirements.

D. Product options.

E. Product substitution procedures.

F. Equipment electrical characteristics and components.

1.2 PRODUCTS

A. Furnish products of qualified manufacturers suitable for intended use. Furnish products of each type by single manufacturer unless specified otherwise.

B. Do not use materials and equipment removed from existing premises, except as specifically permitted by Contract Documents.

C. Furnish interchangeable components from same manufacturer for components being replaced.

1.3 PRODUCT DELIVERY REQUIREMENTS

A. Manufactured materials and products shall be delivered as needed for installation.

B. Transport and handle products in accordance with manufacturer's instructions.

C. Promptly inspect shipments to ensure products comply with requirements, quantities are correct, and products are undamaged, in original packages, containers, or bundles, as packaged by the manufacturer with manufacturer's name, brand, seals, and labels intact.

D. Provide equipment and personnel to handle products by methods to prevent soiling, disfigurement, or damage.

E. Materials other than those designated within the Specifications or approved by the Owner shall not be delivered to the project site.

1.4 PRODUCT STORAGE AND HANDLING REQUIREMENTS

A. Store, protect, and preserve products in accordance with manufacturers' instructions. Store all materials in a manner to facilitate inspection and to prevent damage, contamination, or intermixing.

B. Repair any damage resulting from improper storage procedures, including damage caused by condensation or the elements. If products cannot be repaired to the specified condition as determined by the Engineer, Contractor shall replace them at no additional cost.

C. Contractor shall properly coordinate delivery of equipment/materials to limit to the maximum extent possible storage time on site.

D. Store with seals and labels intact and legible.

E. Store sensitive products in weather tight, climate controlled, enclosures in an environment favorable to product.

F. For exterior storage of fabricated products, place on sloped supports above ground.

G. Cover products subject to deterioration with impervious sheet covering. Provide ventilation to prevent condensation and degradation of products.

H. Store loose granular materials on solid flat surfaces in well-drained area. Prevent mixing with foreign matter.

I. Provide equipment and personnel to store products by methods to prevent soiling, disfigurement, or damage.

J. Arrange storage of products to permit access for inspection. Periodically inspect to verify products are undamaged and are maintained in acceptable condition.

1.5 PRODUCT OPTIONS

A. Products Specified by Reference Standards or by Description Only: Any product meeting those standards or description, subject to the review of product data and concurrence by the Owner as specified in Section 01 33 00.

B. Products Specified by Naming One or More Manufacturers: Products of one of manufacturers named and meeting specifications, no options or substitutions allowed.

C. Products Specified by Naming One or More Manufacturers with Provision for Substitutions: Submit request for substitution for any manufacturer not named in accordance with the following article. Substitutions are subject to concurrence by the Owner as specified in Section 01 33 00.

1.6 PRODUCT SUBSTITUTION PROCEDURES

A. Engineer will consider requests for Substitutions only within 15 days after date of Owner-Contractor Agreement.

B. Substitutions may be considered when a product becomes unavailable through no fault of Contractor.

C. Document each request with complete data substantiating compliance of proposed Substitution with Contract Documents.

D. A request constitutes a representation that Contractor:
   1. Has investigated proposed product and determined that it meets or exceeds quality level of specified product.
   2. Will provide same warranty for Substitution as for specified product.
   3. Will coordinate installation and make changes to other Work which may be required for the Work to be complete with no additional cost to Owner.
   4. Waives claims for additional costs or time extension which may subsequently become apparent.
   5. Will reimburse Owner for review or redesign services associated with re-approval by authorities having jurisdiction.

E. Substitutions will not be considered when they are indicated or implied on Shop Drawing or Product Data submittals, without separate written request, or when acceptance will require revision to Contract Documents.

F. Substitution Submittal Procedure:
   1. Submit request for Substitution for consideration in accordance with the requirements of Section 01 33 00. Limit each request to one proposed Substitution.
   2. Submit Shop Drawings, Product Data, and certified test results attesting to proposed product equivalence. Burden of proof is on proposer.
   3. Engineer will notify Contractor in writing of decision to accept or reject request.

PART 2 PRODUCTS

2.1 EQUIPMENT ELECTRICAL CHARACTERISTICS AND COMPONENTS

A. Wiring Terminations: Furnish terminal lugs to match branch circuit conductor quantities, sizes, and materials indicated. Include lugs for terminal box.

PART 3 EXECUTION - Not Used

END OF SECTION

SECTION 01 70 00

EXECUTION AND CLOSEOUT REQUIREMENTS

PART 1 GENERAL

1.1 SECTION INCLUDES

A. Description of requirements.

B. Prerequisites to substantial completion.

C. Prerequisites to final completion.

D. Final cleaning.

E. Starting of systems.

F. Protecting installed construction.

G. Project record documents.

H. Operation and maintenance data.

I. Manual for equipment and systems.

J. Spare parts and maintenance products.

1.2 DESCRIPTION OF REQUIREMENTS

A. Project closeout is the term used to describe certain collective project requirements, indicating completion of the Work that is to be fulfilled near the end of the Contract time in preparation for final acceptance and occupancy of the Work by the Owner, as well as final payment to the Contractor and the normal termination of the Contract.

B. Specific requirements for individual units of work are included in the appropriate sections.

C. Time of closeout is directly related to "Final Completion"; therefore, the time of closeout may be either a single time period for the entire Work or a series of time periods for individual elements of the Work that have been certified as substantially complete at different dates. This time variation, if any, shall be applicable to the other provisions of this section.

1.3 PREREQUISITES TO SUBSTANTIAL COMPLETION

A. General: Complete the following before requesting the Engineer's inspection for certification of substantial completion, either for the entire Work or for portions of the Work. List known exceptions in the request.
   1. In the progress payment request that coincides with, or is the first request following, the date substantial completion is claimed, show either 100% completion for the portion of the Work claimed as "substantially complete", or list incomplete items, the value of incomplete work, and reasons for the Work being incomplete. Include supporting documentation for completion as indicated in these contract documents.
   2. Submit a statement showing an accounting of changes to the Contract Sum.

3. Submit specific warranties, workmanship/maintenance bonds, final certifications and similar documents.
4. Obtain and submit releases enabling the Owner's full, unrestricted use of the Work.
5. Submit record drawings, maintenance manuals, damage or settlement survey, and similar final record information.
6. Discontinue and remove temporary facilities and services from the project site, along with construction tools and facilities.

B. Inspection Procedures: Upon receipt of the Contractor's Request for Substantial Completion, the Engineer will either proceed with inspection or advise the Contractor of unfilled prerequisites.
1. Following the initial inspection, the Engineer will either prepare the certificate of substantial completion or will advise the Contractor of work which must be performed before the certificate will be issued. The Engineer will repeat the inspection when requested and when assured that the Work has been substantially completed.
2. Results of the completed inspection will form the initial "punch-list" for final acceptance.

1.4 PREREQUISITES TO FINAL ACCEPTANCE

A. General: After the “punch-list” items have been completed the Contractor may request the Engineer's final inspection (Request for Final Completion) for certification of final completion, and final payment as required by the General Conditions. List known exceptions, if any, in the request.
1. Submit executed Request for Final Completion with executed “punch-list”.
2. Submit the final payment request with final releases and supporting documentation not previously submitted and accepted. Include certificates of insurance for products and completed operations where required.
3. Submit an updated final statement, accounting for final additional changes to the Contract Sum.
4. Submit a certified copy of the Engineer's final punch-list of itemized work to be completed or corrected, stating that each item has been completed or otherwise resolved for acceptance and has been endorsed and dated by the Engineer.
5. Submit consent of surety.
6. Submit a final liquidated damages settlement statement, acceptable to the Owner.

B. Re-inspection Procedure: The Engineer will re-inspect the Work upon receipt of the Contractor's notice that the work, including punch-list items resulting from earlier inspections, has been completed, except for these items whose completion has been delayed because of circumstances that are acceptable to the Engineer.
1. Upon completion of re-inspection, the Engineer will either prepare a certificate of final completion or will advise the Contractor of work that is incomplete or of obligations that have not been fulfilled but are required for final acceptance.
2. If necessary, the re-inspection procedure will be repeated.

1.5 FINAL CLEANING

A. Execute final cleaning prior to final project assessment.

B. Except as otherwise indicated or requested by the Engineer, remove temporary protection devices and facilities which were installed during the course of the Work to protect previously completed Work during the remainder of the construction period.

C. Clean equipment and fixtures to sanitary condition with cleaning materials appropriate to surface and material being cleaned.

D. Clean filters of operating equipment.

E. Clean site; sweep paved areas, rake clean landscaped surfaces.

F. Remove waste and surplus materials, rubbish, and construction facilities from site. Comply with safety standards and governing regulations for cleaning operations. Do not burn waste materials at the site. Do not bury debris or excess materials on the Owner's property. Remove waste materials from the site and dispose of in a lawful manner.

1.6 STARTING OF SYSTEMS

A. Coordinate schedule for start-up of various equipment and systems with Manufacture's Representative.

B. Notify Engineer seven days prior to start-up of each item.

C. Verify each piece of equipment or system has been checked for proper lubrication, drive rotation, belt tension, control sequence, and for conditions which may cause damage.

D. Verify tests, meter readings, and specified electrical characteristics agree with those required by equipment or system manufacturer.

E. Verify wiring and support components for equipment are complete and tested.

F. Execute start-up under supervision of applicable manufacturer's representative and Contractors' personnel in accordance with manufacturers' instructions.

G. When specified in individual specification Sections, require manufacturer to provide authorized representative to be present at site to inspect, check, and approve equipment or system installation prior to start-up, and to supervise placing equipment or system in operation.

H. Submit a written report in accordance with Section 01 33 00 - Submittal Procedures that equipment or system has been properly installed and is functioning correctly.

1.7 PROTECTING INSTALLED CONSTRUCTION

A. Protect installed Work and provide special protection where specified in individual specification sections.

B. Provide temporary and removable protection for installed products. Control activity in immediate work area to prevent damage.

C. Provide protective coverings at walls, projections, jambs, sills, and soffits of openings.

D. Protect finished floors, stairs, and other surfaces from traffic, dirt, wear, damage, or movement of heavy objects, by protecting with durable sheet materials.

E. Prohibit traffic or storage upon waterproofed or roofed surfaces. When traffic or activity is necessary, obtain recommendations for protection from waterproofing or roofing material manufacturer.

F. Prohibit traffic from landscaped areas.

1.8 PROJECT RECORD DOCUMENTS

A. Maintain on site one set of the following record documents; record actual revisions to the Work:
   1. Drawings.
   2. Specifications.
   3. Addenda.
   4. Change Orders and other modifications to the Contract.
   5. Reviewed Shop Drawings, Product Data, and Samples.

6. Manufacturer's instruction for assembly, installation, and adjusting.

B. Ensure entries are complete and accurate, enabling future reference by Owner.

C. Store record documents separate from documents used for construction. Protect from deterioration and loss in a secure, fire-resistive location.

D. Provide access to record documents for Owner and Engineer reference during normal working hours.

E. Record information concurrent with construction progress, not less than weekly. All record documents must be kept up to date on a continuous basis by all contractors and subcontractors. Failure to do so will result in withholding additional money from monthly payment requests.

F. Record Specifications:
   1. Maintain one complete copy of the Project Manual, including specifications and addenda, and one copy of other written construction documents such as change orders and similar modifications issued in printed form during construction.
   2. Legibly mark and record at each product section description of actual products installed, including the following:
      a. Manufacturer's name and product model and number.
      b. Product substitutions or alternates utilized.
      c. Changes made by Addenda and modifications.

G. Record Drawings and Shop Drawings:
   1. Legibly mark each item to record actual construction including:
      a. Measured depths of foundations in relation to finish [first] [main] floor datum.
      b. Measured horizontal and vertical locations of underground utilities and appurtenances, referenced to permanent surface improvements.
      c. Measured locations of internal utilities and appurtenances concealed in construction, referenced to visible and accessible features of the Work.
      d. Field changes of dimension and detail.
      e. Details not on original Contract drawings.
   2. Mark whichever drawing is most capable of showing the actual "field" condition fully and accurately; however, where shop drawings are used for mark-up, record a cross-reference at the corresponding location on the working drawings.
      a. Mark record sets with red erasable pencil and, where feasible, use other colors to distinguish between variations in separate categories of work.
      b. Mark-up new information which is known to be important to the Owner and Engineer but was not shown on either contract drawings or shop drawings.
      c. Note related change-order numbers where applicable.
      d. Organize record drawing sheets into manageable sets, bind with durable paper cover sheets, and print suitable titles, dates and other identification on the cover of each set.
      e. For buried piping, electrical, conduits, etc. measure distance to permanent exposed improvements that will enable locations to be determined after backfilling. Provide two measurements for all bends, fittings, etc.

H. Record Product Data: Maintain one copy of each product data submittal. Mark these documents to show significant variations in the actual Work performed in comparison with the submitted information. Include both variations in the products as delivered to the site, and variations from the manufacturer's instructions and recommendations for installation. Give particular attention to concealed products and portions of the Work which cannot otherwise be readily discerned at a later date by direct observation. Note related change orders and mark-up of record drawings and specifications.
   1. Upon Completion of mark-up, submit complete set of record product data to the Engineer for the Owner's records.

I. Miscellaneous Record Submittals: Refer to other sections of these specifications for requirements of miscellaneous record-keeping and submittals in connection with the actual performance of the Work. Immediately prior to the date or dates of substantial completion, complete miscellaneous records and place in good order, properly identified and bound or filed, ready for continued use and reference. Submit to the Engineer for the Owner's records.

J. Submit documents to Engineer with claim for final Application for Payment.

1.9 OPERATION AND MAINTENANCE DATA

A. Submit data bound in 8-1/2 x 11-inch text pages, three D side ring binders with durable covers.

B. Prepare binder cover with printed title "OPERATION AND MAINTENANCE INSTRUCTIONS", title of project, and subject matter of binder when multiple binders are required.

C. Internally subdivide binder contents with permanent page dividers, logically organized as described below; with tab titling clearly printed under reinforced laminated plastic tabs.

D. Drawings: Provide with reinforced punched binder tab. Bind in with text; fold larger drawings to size of text pages.

E. Contents: Prepare Table of Contents for each volume, with each product or system description identified, typed on white paper, in three parts as follows:
   1. Part 1: Directory, listing names, addresses, and telephone numbers of Engineer, Contractor, Subcontractors, and major equipment suppliers.
   2. Part 2: Operation and maintenance instructions, arranged by system and subdivided by specification section. For each category, identify names, addresses, and telephone numbers of Subcontractors and suppliers. Identify the following:
      a. Significant design criteria.
      b. List of equipment.
      c. Parts list for each component.
      d. Operating instructions.
      e. Maintenance instructions for equipment and systems.
      f. Maintenance instructions for [special] finishes, including recommended cleaning methods and materials, and special precautions identifying detrimental agents.
   3. Part 3: Project documents and certificates, including the following:
      a. Shop drawings and product data.
      b. Certificates.
      c. Originals of warranties and bonds.

1.10 MANUAL FOR EQUIPMENT AND SYSTEMS

A. For equipment, or component parts of equipment put into service during construction and operated by Owner, submit documents within ten days after acceptance.

B. Submit one copy of completed volume15 days prior to final inspection. Draft copy be reviewed and returned, with Engineer comments. Revise content of document sets as required prior to final submission.

C. Submit two sets of revised final volumes in final form within 10 days after final inspection.

D. Each Item of Equipment and Each System: Include description of unit or system, and component parts. Identify function, normal operating characteristics, and limiting conditions. Include performance curves, with engineering data and tests, and complete nomenclature and model number of replaceable parts.

E. Include manufacturer's printed operation and maintenance instructions.

F. Additional Requirements: As specified in individual product specification sections.

G. Include listing in Table of Contents for design data, with tabbed dividers and space for insertion of data.

1.11 SPARE PARTS AND MAINTENANCE PRODUCTS

A. Furnish spare parts, maintenance, and extra products in quantities specified in individual specification sections.

B. Deliver to Project site and place in location as directed by Owner; obtain receipt prior to final payment.

PART 2 PRODUCTS - Not Used

PART 3 EXECUTION - Not Used

END OF SECTION

SECTION 024119

SELECTIVE DEMOLITION

PART 1 GENERAL

1.1 SECTION INCLUDES
- A. Preparation.
- B. Examination.
- C. Equipment Removal.
- D. Salvage Requirements.
- E. Demolition.

1.2 CLOSEOUT SUBMITTALS

A. Project Record Documents: Accurately record actual locations of capped utilities, concealed utilities discovered during demolition, and subsurface obstructions.

1.3 QUALITY ASSURANCE

A. Conform to applicable code for demolition work, dust control, products requiring electrical disconnection and re-connection.

B. Conform to applicable code for procedures when hazardous or contaminated materials are discovered.

C. Obtain required permits from authorities having jurisdiction.

1.4 SCHEDULING

A. Cooperate with Owner in scheduling noisy operations and waste removal that may impact Owners operation and adjoining spaces.

B. Coordinate with the Owner any building service interruptions.

1. Do not disable or disrupt building fire or life safety systems without three calendar days prior written notice to Owner.
2. Schedule tie-ins to existing systems to minimize disruption.
3. Coordinate Work to ensure fire alarms, smoke detectors, emergency lighting, exit signs and other life safety systems remain in full operation in occupied areas.

1.5 PROJECT CONDITIONS

A. Conduct demolition to minimize interference with adjacent building areas.

B. Cease operations immediately if structure appears to be in danger and notify Engineer. Do not resume operations until directed.

PART 2 PRODUCTS

Not Used.

PART 3 EXECUTION

3.1 PREPARATION

A. Mark location and termination of utilities.

B. Erect, and maintain temporary barriers and security devices at locations indicated, including warning signs and lights, and similar measures, for protection of the Owner and existing improvements indicated to remain.

C. Erect and maintain temporary partitions to prevent spread of dust, odors, and noise to permit continued Owner occupancy, where necessary.

D. Prevent movement of structure; provide temporary bracing and shoring as required to ensure safety of existing structure.

E. Provide appropriate temporary signage including signage for exit or building egress.

F. Do not close or obstruct building egress path.

3.2 EXAMINATION

A. Examine existing equipment and structures indicated to be demolished before demolition.

B. Determine where removals may result in structural deficiency or unplanned building collapse during demolition. Coordinate demolition sequence and procedures to prevent structures from becoming unstable.

C. Determine where demolition may affect structural integrity or weather resistance of adjacent buildings or structures indicated to remain.

1. Identify measures required to protect adjacent buildings and structures from damage.
2. Identify remedial work including patching, repairing, bracing, and other work required to leave buildings and structures indicated to remain in structurally sound and weathertight and watertight condition.

3.3 EQUIPMENT REMOVAL

A. Piping, fittings, equipment, and accessories to be replaced as shown on the Contract Drawings shall be removed by the Contractor.

B. The piping, fittings, equipment, and accessories shall be removed from the site by the Contractor at his own expense. The equipment shall be removed from the site within seven (7) days of removing it from the building.

3.4 SALVAGE REQUIREMENTS

A. Coordinate with Owner/Engineer to identify equipment required to be removed and delivered to Owner.

B. Tag components and equipment Owner designates for salvage. Identification tags shall remain intact on all removed equipment and identify the date and location from which the salvaged item was removed.

C. Protect designated salvage items from demolition operations until items can be removed.

D. Remove materials to be re-installed or retained in manner to prevent damage. Store and protect in accordance with requirements of Section 01 60 00.

E. Carefully remove building components and equipment indicated to be salvaged.

F. Package small and loose parts to avoid loss.

G. Mark equipment and packaged parts to permit identification and consolidation of components of each salvaged item.

H. Prepare assembly instructions consistent with disassembled parts. Package assembly instructions in protective envelope and securely attach to each salvaged item.

3.5 DEMOLITION

A. Contractor must coordinate dumpster requirements with the owner. If dumpster is not allowed to the site, at the end of working day, all removed items shall be hauled away and disposed of at the contractor expense.

B. Maintain protected egress from and access to adjacent existing buildings at all times.

C. Do not close or obstruct roadways or sidewalks without Owner approval.

D. Cease operations immediately if structure appears to be in danger and notify Engineer.

E. Disconnect and remove designated utilities within demolition areas.

F. Cap and identify abandoned utilities at termination points when utility is not completely removed. Annotate Record Drawings indicating location and type of service for capped utilities remaining after demolition.

G. Demolish in orderly and careful manner. Protect existing improvements and supporting structural members.

H. Remove demolished materials from site except where specifically noted otherwise. Do not burn or bury materials on site.

I. Remove materials as Work progresses. Upon completion of Work, leave areas in clean condition.

J. The owner may choose to allow storage of removed materials in mechanical room if space is available.

K. Conduct demolition to minimize interference with adjacent building areas.

L. Project site does not allow contractor to bring a dumpster onsite.

M. At the end of working day, contractor must haul away and dispose all removed materials at the contractor expense. The owner may choose to allow storage of removed materials in mechanical room if space is available.

END OF SECTION

SECTION 23 05 29

HANGERS AND SUPPORTS FOR HVAC PIPING AND EQUIPMENT

PART 1 GENERAL

1.1 SUMMARY

A. Section Includes:
1. Pipe hangers and supports.
2. Hanger rods.
3. Inserts.
4. Flashing.
5. Sleeves.
6. Mechanical sleeve seals.
7. Formed steel channel.
8. Firestopping relating to HVAC work.
9. Firestopping accessories.
10. Equipment bases and supports.

1.2 REFERENCES

A. American Society of Mechanical Engineers:
1. ASME B31.1 - Power Piping.
2. ASME B31.5 - Refrigeration Piping.
3. ASME B31.9 - Building Services Piping.

B. ASTM International:
1. ASTM E119 - Standard Test Methods for Fire Tests of Building Construction and Materials.
2. ASTM E814 - Standard Test Method for Fire Tests of Through Penetration Fire Stops.
3. ASTM F708 - Standard Practice for Design and Installation of Rigid Pipe Hangers.
4. ASTM E1966 - Standard Test Method for Fire-Resistive Joint Systems.

C. American Welding Society:
1. AWS D1.1 - Structural Welding Code - Steel.

D. FM Global:
1. FM - Approval Guide, A Guide to Equipment, Materials & Services Approved By Factory Mutual Research For Property Conservation.

E. Underwriters Laboratories Inc.:
1. UL 263 - Fire Tests of Building Construction and Materials.
2. UL 723 - Tests for Surface Burning Characteristics of Building Materials.
3. UL 1479 - Fire Tests of Through-Penetration Firestops.
4. UL 2079 - Tests for Fire Resistance of Building Joint Systems.
5. UL - Fire Resistance Directory.

1.3 DEFINITIONS

A. Firestopping (Through-Penetration Protection System): Sealing or stuffing material or assembly placed in spaces between and penetrations through building materials to arrest movement of fire, smoke,

heat, and hot gases through fire rated construction. All existing corridor walls are treated as fire rated walls.

1.4 SYSTEM DESCRIPTION

A. Firestopping Materials: ASTM E119, ASTM E814, UL 263, UL 1479 to achieve fire ratings as noted on Drawings for adjacent construction, but not less than 1 hour fire rating.

B. B. Surface Burning: ASTM E84, UL 723 with maximum flame spread / smoke developed rating of 25/450.

C. Firestop interruptions to fire rated assemblies, materials, and components. Fire rating of existing walls is shown on Drawing Sheet A-001.

1.5 PERFORMANCE REQUIREMENTS

A. Firestopping: Conform to applicable code for fire resistance ratings and surface burning characteristics.

1.6 SUBMITTALS

A. Shop Drawings: Indicate system layout with location including critical dimensions, sizes, and pipe hanger and support locations and detail of trapeze hangers.

B. Product Data:
   1. Hangers and Supports: Submit manufacturers catalog data including load capacity.
   2. Firestopping: Submit data on product characteristics, performance and limitation criteria.

C. Firestopping Schedule: Submit schedule of opening locations and sizes, penetrating items, and required listed design numbers to seal openings to maintain fire resistance rating of adjacent assembly.

D. Manufacturer's Installation Instructions:
   1. Hangers and Supports: Submit special procedures and assembly of components.
   2. Firestopping: Submit preparation and installation instructions.

E. Manufacturer's Certificate: Certify products meet or exceed specified requirements.

1.7 QUALITY ASSURANCE

A. Through Penetration Firestopping of Fire Rated Assemblies: UL 1479 or ASTM E814 with 0.10 inch water gage minimum positive pressure differential to achieve fire F-Ratings and temperature T-Ratings as indicated on Drawings, but not less than 1-hour.
   1. Wall Penetrations: Fire F-Ratings as indicated on Drawings, but not less than 1-hour.
   2. Floor [and Roof] Penetrations: Fire F-Ratings and temperature T-Ratings as indicated on Drawings, but not less than 1-hour.
      a. Floor Penetrations Within Wall Cavities: T-Rating is not required.

B. Through Penetration Firestopping of Non-Fire Rated Floor and Roof Assemblies: Materials to resist free passage of flame and products of combustion.
   1. Noncombustible Penetrating Items: Noncombustible materials for penetrating items connecting maximum of three stories.

2. Penetrating Items: Materials approved by authorities having jurisdiction for penetrating items connecting maximum of two stories.

C. Fire Resistant Joints in Fire Rated Floor, Roof, and Wall Assemblies: ASTM E1966 or UL 2079 to achieve fire resistant rating as indicated on Drawings for assembly in which joint is installed.

D. Fire Resistant Joints Between Floor Slabs and Exterior Walls: ASTM E119 with 0.10 inch water gage minimum positive pressure differential to achieve fire resistant rating as indicated on Drawings for floor assembly.

E. Surface Burning Characteristics: Maximum 25/450 flame spread/smoke developed index when tested in accordance with ASTM E84.

F. Perform Work in accordance with AWS D1.1 for welding hanger and support attachments to building structure.

1.8 DELIVERY, STORAGE, AND HANDLING

A. Accept materials on site in original factory packaging, labeled with manufacturer's identification.

B. Protect from weather and construction traffic, dirt, water, chemical, and damage, by storing in original packaging.

1.9 ENVIRONMENTAL REQUIREMENTS

A. Do not apply firestopping materials when temperature of substrate material and ambient air is below 60 degrees F.

B. Maintain this minimum temperature before, during, and for minimum 3 days after installation of firestopping materials.

C. Provide ventilation in areas to receive solvent cured materials.

PART 2 PRODUCTS

2.1 PIPE HANGERS AND SUPPORTS

A. Manufacturers:
1. Carpenter & Paterson Inc.
2. Creative Systems Inc.
3. Flex-Weld, Inc.
4. Glope Pipe Hanger Products Inc.
5. Michigan Hanger Co.
6. Superior Valve Co.

B. Hydronic Piping:
1. Conform to ASME B31.9
2. Hangers for Pipe Sizes 1/2 to 1-1/2 inch: Malleable iron or Carbon steel, adjustable swivel, split ring.
3. Hangers for Cold Pipe Sizes 2 inches and Larger: Carbon steel, adjustable, clevis.
4. Hangers for Hot Pipe Sizes 2 to 4 inches: Carbon steel, adjustable, clevis.
5. Multiple or Trapeze Hangers: Steel channels with welded spacers and hanger rods.

6. Wall Support for Pipe Sizes 3 inches and Smaller: Cast iron hooks.
7. Wall Support for Pipe Sizes 4 inches and Larger: Welded steel bracket and wrought steel clamp.
8. Vertical Support: Steel riser clamp.
9. Floor Support for Cold Pipe: Cast iron adjustable pipe saddle, lock nut, nipple, floor flange, and concrete pier or steel support.
10. Floor Support for Hot Pipe Sizes 4 Inches and Smaller: Cast iron adjustable pipe saddle, lock nut, nipple, floor flange, and concrete pier or steel support.
11. Copper Pipe Support: Copper-plated, carbon steel ring.

2.2 ACCESSORIES

A. Hanger Rods: Mild steel threaded both ends, threaded on one end, or continuous threaded.

2.3 INSERTS

A. Inserts: Malleable iron case of galvanized steel shell and expander plug for threaded connection with lateral adjustment, top slot for reinforcing rods, lugs for attaching to forms; size inserts to suit threaded hanger rods.

2.4 FLASHING

A. Metal Flashing: 26 gage thick galvanized steel.

B. Metal Counterflashing: 22 gage thick galvanized steel.

C. Lead Flashing:
1. Waterproofing: 5 lb./sq. ft sheet lead.
2. Soundproofing: 1 lb./sq. ft sheet lead.

D. Flexible Flashing: 47 mil thick sheet butyl; compatible with roofing.

E. Caps: Steel, 22 gage minimum; 16 gage at fire resistant elements.

2.5 SLEEVES

A. Sleeves for Pipes Through Non-fire Rated Floors: 18 gage thick galvanized steel.

B. Sleeves for Pipes Through Non-fire Rated Beams, Walls, Footings, and Potentially Wet Floors: Steel pipe or 18 gage thick galvanized steel.

C. Sleeves for Round Ductwork: Galvanized steel.

D. Sleeves for Rectangular Ductwork: Galvanized steel or wood.

E. Sealant: Acrylic.

2.6 MECHANICAL SLEEVE SEALS

A. Manufacturers:
1. Thunderline Link-Seal, Inc.
2. NMP Corporation.

B. Product Description: Modular mechanical type, consisting of interlocking synthetic rubber links shaped to continuously fill annular space between object and sleeve, connected with bolts and pressure plates causing rubber sealing elements to expand when tightened, providing watertight seal and electrical insulation.

2.7 FORMED STEEL CHANNEL

A. Manufacturers:
1. Allied Tube & Conduit Corp.
2. B-Line Systems
3. Midland Ross Corporation, Electrical Products Division
4. Unistrut Corp.

B. Product Description: Galvanized 12 gage thick steel. With holes 1-1/2 inches on center.

2.8 FIRESTOPPING

A. Manufacturers:
1. Dow Corning Corp.
2. Fire Trak Corp.
3. Hilti Corp.
4. International Protective Coating Corp.
5. 3M fire Protection Products
6. Specified Technology, Inc.

B. Product Description: Different types of products by multiple manufacturers are acceptable as required to meet specified system description and performance requirements; provide only one type for each similar application.
1. Foam Firestopping Compounds: Multiple component foam compound.
2. Fiber Stuffing and Sealant Firestopping: Composite of mineral fiber stuffing insulation with silicone elastomer for smoke stopping.
3. Intumescent Firestopping: Intumescent putty compound which expands on exposure to surface heat gain.

C. Color: To be selected by archited/engineer.

2.9 FIRESTOPPING ACCESSORIES

A. Primer: Type recommended by firestopping manufacturer for specific substrate surfaces and suitable for required fire ratings.

B. Dam Material: Permanent:
1. Sheet metal.

C. Installation Accessories: Provide clips, collars, fasteners, temporary stops or dams, and other devices required to position and retain materials in place.

D. General:
1. Furnish UL listed products [or products tested by independent testing laboratory.
2. Select products with rating not less than rating of wall or floor being penetrated.

E. Non-Rated Surfaces:

1. Stamped steel, chrome plated, hinged, split ring escutcheons or floor plates or ceiling plates for covering openings in occupied areas where piping is exposed.
2. For exterior wall openings below grade, furnish mechanical sealing device to continuously fill annular space between piping and cored opening or water-stop type wall sleeve.

PART 3 EXECUTION

3.1 EXAMINATION

A. Verify openings are ready to receive sleeves.

B. Verify openings are ready to receive firestopping.

3.2 PREPARATION

A. Clean substrate surfaces of dirt, dust, grease, oil, loose material, or other matter affecting bond of firestopping material.

B. Remove incompatible materials affecting bond.

C. Install backing or damming materials to arrest liquid material leakage.

D. Obtain permission from Owner before using powder-actuated anchors.

E. Obtain permission from Owner before drilling or cutting structural members.

3.3 INSTALLATION - INSERTS

A. Install inserts for placement in concrete forms.

B. Install inserts for suspending hangers from reinforced concrete slabs and sides of reinforced concrete beams.

C. Provide hooked rod to concrete reinforcement section for inserts carrying pipe 4 inches and larger.

D. Where concrete slabs form finished ceiling, locate inserts flush with slab surface.

E. Where inserts are omitted, drill through concrete slab from below and provide through-bolt with recessed square steel plate and nut flush with top of slab.

3.4 INSTALLATION - PIPE HANGERS AND SUPPORTS

A. Install in accordance with ASME B31.1; ASME B31.5; ASME 31.9; ASTM F708.

B. Support horizontal piping as scheduled.

C. Install hangers with minimum 1/2 inch space between finished covering and adjacent work.

D. Place hangers within 12 inches of each horizontal elbow.

E. Use hangers with 1-1/2 inch minimum vertical adjustment.

F. Support vertical piping at every other floor.

G. Where piping is installed in parallel and at same elevation, provide multiple pipe or trapeze hangers.

H. Support riser piping independently of connected horizontal piping.

I. Provide copper plated hangers and supports for copper piping.

J. Design hangers for pipe movement without disengagement of supported pipe.

K. Prime coat exposed steel hangers and supports. Hangers and supports located in crawl spaces, pipe shafts, and suspended ceiling spaces are not considered exposed.

L. Provide clearance in hangers and from structure and other equipment for installation of insulation.

3.5 INSTALLATION - EQUIPMENT BASES AND SUPPORTS

A. Provide housekeeping pads of concrete, minimum 3-1/2 inches thick and extending 6 inches beyond supported equipment.

B. Using templates furnished with equipment, install anchor bolts, and accessories for mounting and anchoring equipment.

C. Construct supports of steel members or formed steel channel or steel pipe and fittings. Brace and fasten with flanges bolted to structure.

D. Provide rigid anchors for pipes after vibration isolation components are installed.

3.6 INSTALLATION - FLASHING

A. Provide flexible flashing and metal Counterflashing where piping and ductwork penetrate weather or waterproofed walls, floors, and roofs.

B. Provide acoustical lead flashing around ducts and pipes penetrating equipment rooms for sound control.

C. Provide curbs for roof installations 12 inches minimum high above roofing surface. Flash and counter-flash with sheet metal; seal watertight. Attach Counterflashing to equipment and lap base flashing on roof curbs. Flatten and solder joints.

D. Adjust storm collars tight to pipe with bolts; caulk around top edge. Use storm collars above roof jacks. Screw vertical flange section to face of curb.

3.7 INSTALLATION - SLEEVES

A. Exterior watertight entries: Seal with mechanical sleeve seals.

B. Set sleeves in position in forms. Provide reinforcing around sleeves.

C. Size sleeves large enough to allow for movement due to expansion and contraction. Provide for continuous insulation wrapping.

D. Extend sleeves through floors 1 inch above finished floor level. Caulk sleeves.

E. Where piping or ductwork penetrates floor, ceiling, or wall, close off space between pipe or duct and adjacent work with firestopping insulation and caulk airtight. Provide close fitting metal collar or escutcheon covers at both sides of penetration.

F. Install chrome plated steel stainless steel escutcheons at finished surfaces.

3.8 INSTALLATION - FIRESTOPPING

A. Install material at fire rated construction perimeters and openings containing penetrating sleeves, piping, ductwork, and other items, requiring firestopping.

B. Apply primer where recommended by manufacturer for type of firestopping material and substrate involved, and as required for compliance with required fire ratings.

C. Apply firestopping material in sufficient thickness to achieve required fire and smoke rating, to uniform density and texture.

D. Compress fibered material to maximum 40 percent of its uncompressed size.

E. Place foamed material in layers to ensure homogenous density, filling cavities and spaces. Place sealant to completely seal junctions with adjacent dissimilar materials.

F. Place intumescent coating in sufficient coats to achieve rating required.

G. Remove dam material after firestopping material has cured.

H. Fire Rated Surface:
   1. Seal opening at floor, wall, partition, ceiling, and roof as follows:
      a. Install sleeve through opening and extending beyond minimum of 1 inch on both sides of building element.
      b. Size sleeve allowing minimum of 1 inch void between sleeve and building element.
      c. Pack void with backing material.
      d. Seal ends of sleeve with UL listed fire resistive silicone compound to meet fire rating of structure penetrated.
   2. Where cable tray, bus, cable bus, conduit, wireway, trough, and penetrates fire rated surface, install firestopping product in accordance with manufacturer's instructions.

I. Non-Rated Surfaces:
   1. Seal opening through non-fire rated wall, partition floor, ceiling, and roof opening as follows:
      a. Install sleeve through opening and extending beyond minimum of 1 inch on both sides of building element.
      b. Size sleeve allowing minimum of 1 inch void between sleeve and building element.
      c. Install type of firestopping material recommended by manufacturer.
   2. Install escutcheons, floor plates or ceiling plates where conduit, penetrates non-fire rated surfaces in occupied spaces. Occupied spaces include rooms with finished ceilings and where penetration occurs below finished ceiling.
   3. Exterior wall openings below grade: Assemble rubber links of mechanical sealing device to size of piping and tighten in place, in accordance with manufacturer's instructions.
   4. Interior partitions: Seal pipe penetrations at computer rooms, telecommunication rooms and data rooms. Apply sealant to both sides of penetration to completely fill annular space between sleeve and conduit.

3.9 FIELD QUALITY CONTROL

A. Inspect installed firestopping for compliance with specifications and submitted schedule.

3.10 CLEANING

A. Clean adjacent surfaces of firestopping materials.

3.11 PROTECTION OF FINISHED WORK

A. Protect adjacent surfaces from damage by material installation.

3.12 SCHEDULES

A. Copper and Steel Pipe Hanger Spacing:

PIPE SIZE Inches	COPPER TUBING MAXIMUM HANGER SPACING Feet	STEEL PIPE MAXIMUM HANGER SPACING Feet	COPPER TUBING HANGER ROD DIAMETER Inches	STEEL PIPE HANGER ROD DIAMETER Inches
1/2	5	7	3/8	3/8
3/4	5	7	3/8	3/8
1	6	7	3/8	3/8
1-1/4	7	7	3/8	3/8
1-1/2	8	9	3/8	3/8
2	8	10	3/8	3/8
2-1/2 (Note 1)	9	11	1/2	1/2
3	10	12	1/2	1/2
4	12	14	1/2	5/8

B. Plastic and Ductile Iron Pipe Hanger Spacing:

PIPE MATERIAL	MAXIMUM HANGER SPACING Feet	HANGER ROD DIAMETER Inches
PVC (All Sizes)	4	3/8

C. Note 1: 20 feet maximum spacing, minimum of one hanger for each pipe section close to joint behind bell. Provide hanger at each change of direction and each branch connection. For pipe sizes 6 inches and smaller, subjected to loadings other than weight of pipe and contents, limit span to maximum spacing for water service steel pipe.

END OF SECTION

SECTION 23 05 53

IDENTIFICATION FOR HVAC PIPING AND EQUIPMENT

PART 1 GENERAL

1.1 SUMMARY

A. Section Includes:
1. Nameplates.
2. Tags.
3. Pipe markers.
4. Duct markers.
5. Labels.

1.2 REFERENCES

A. American Society of Mechanical Engineers:
1. ASME A13.1 - Scheme for the Identification of Piping Systems.

1.3 SUBMITTALS

A. Product Data: Submit manufacturers catalog literature for each product required.

B. Shop Drawings: Submit list of wording, symbols, letter size, and color coding for mechanical identification and valve chart and schedule, including valve tag number, location, function, and valve manufacturer's name and model number.

C. Samples: Submit two tags, labels, and pipe markers, size used on project.

D. Manufacturer's Installation Instructions: Indicate installation instructions, special procedures, and installation.

1.4 QUALITY ASSURANCE

A. Conform to ASME A13.1 for color scheme for identification of piping systems and accessories.

PART 2 PRODUCTS

2.1 NAMEPLATES

A. Manufacturers:
1. Craftmark Identification Systems
2. Safety Sign Co.
3. Seton Identification Products

B. Product Description: Laminated three-layer plastic with engraved black letters on light contrasting background color.

2.2 TAGS

A. Manufacturers:
1. Craftmark Identification Systems
2. Safety Sign Co.
3. Seton Identification Products

B. Plastic Tags
1. Laminated three-layer plastic with engraved black letters on light contrasting background color. Tag size minimum 1-1/2 inches diameter.

C. Metal Tags:
1. Aluminum with stamped letters; tag size minimum 1-1/2 inches diameter with finished edges.

2.3 PIPE MARKERS

A. Manufacturers:
1. Craftmark Identification Systems
2. Safety Sign Co.
3. Seton Identification Products

B. Color and Lettering: Conform to ASME A13.1.

C. Plastic Pipe Markers:

1. Bright colored continuously printed plastic ribbon tape, minimum 6 inches wide by 4 mil thick, manufactured for direct burial service.
2. Bright colored continuously printed plastic sheet with separate direction allows. 1-1/4" size letters for pipe size 2" and smaller. 2-1/2" for pipe sizes 2-1/2" and larger.
3. Flexible, vinyl film tape with pressure sensitive adhesive backing and printed markings.

2.4 LABELS

A. Manufacturers:
1. Craftmark Identification Systems
2. Safety Sign Co.
3. Seton Identification Products

B. Description: Laminated Mylar, size 1.9 x 0.75 inches, adhesive backed with printed identification.

PART 3 EXECUTION

3.1 PREPARATION

A. Degrease and clean surfaces to receive adhesive for identification materials.

3.2 INSTALLATION

A. Install identifying devices after completion of coverings and painting.

B. Install plastic nameplates with corrosive-resistant mechanical fasteners, or adhesive.

C. Install labels with sufficient adhesive for permanent adhesion and seal with clear lacquer. For unfinished canvas covering, apply paint primer before applying labels.

D. Install tags using corrosion resistant chain. Number tags consecutively by location.

E. Identify boiler with plastic nameplates.

F. Identify valves in main and branch piping with tags.

G. Tag automatic controls, instruments, and relays. Key to control schematic.

H. Identify piping, concealed or exposed, with plastic pipe markers. Identify service, flow direction, and pressure. Install in clear view and align with axis of piping. Locate identification not to exceed 20 feet on straight runs including risers and drops, adjacent to each valve and tee, at each side of penetration of structure or enclosure, and at each obstruction.

I. Provide ceiling tacks to locate valves or dampers above T-bar type panel ceilings. Locate in corner of panel closest to equipment.

END OF SECTION

SECTION 230593

TESTING, ADJUSTING, AND BALANCING FOR HVAC

PART 1 GENERAL

1.1 WORK INCLUDES

A. Contractor provide:
   1. Testing adjusting and balancing of air moving equipment/systems.
   2. Testing adjusting and balancing of hydronic systems.
   3. Measurement of final operating condition of HVAC systems.
   4. Sound measurement of equipment operating conditions.
   5. Vibration measurement of equipment operating conditions.

1.2 REFERENCES

A. Associated Air Balance Council:
   1. AABC MN-1 - National Standards for Testing and Balancing Heating, Ventilating, and Air Conditioning Systems.

B. American Society of Heating, Refrigerating and Air-Conditioning Engineers:
   1. ASHRAE 111 - Practices for Measurement, Testing, Adjusting and Balancing of Building Heating, Ventilation, Air-Conditioning and Refrigeration Systems.

C. Natural Environmental Balancing Bureau:
   1. NEBB - Procedural Standards for Testing, Adjusting, and Balancing of Environmental Systems.

1.3 SUBMITTALS

A. Prior to commencing Work, submit proof of latest calibration date of each instrument.

B. Test Reports: Indicate data on forms prepared following ASHRAE 111

C. Field Reports: Indicate deficiencies preventing proper testing, adjusting, and balancing of systems and equipment to achieve specified performance.

D. Prior to commencing Work, submit report forms or outlines indicating adjusting, balancing, and equipment data required. Include detailed procedures, agenda, sample report forms and copy of AABC National Project Performance Guaranty or Copy of NEBB Certificate of Conformance Certification.

E. Submit draft copies of report for review prior to final acceptance of Project.

F. Furnish reports in soft cover, letter size, binder manuals, complete with table of contents page and indexing tabs, with cover identification at front and side. Include set of reduced drawings with air outlets and equipment identified to correspond with data sheets, and indicating thermostat locations.

1.4 CLOSEOUT SUBMITTALS

A. Project Record Documents: Record actual locations of flow measuring stations and balancing valves and rough setting.

B. Operation and Maintenance Data: Furnish final copy of testing, adjusting, and balancing report inclusion in operating and maintenance manuals.

1.5 QUALITY ASSURANCE

A. Perform Work in accordance with ASHRAE 111.

B. Prior to commencing Work, calibrate each instrument to be used. Upon completing Work, recalibrate each instrument to assure reliability.

1.6 QUALIFICATIONS

A. Agency: Company specializing in testing, adjusting, and balancing of systems specified in this section with minimum three years documented experience certified by AABC or Certified by NEBB.

B. Perform Work under supervision of AABC Certified Test and Balance Engineer, NEBB Certified Testing, Balancing and Adjusting Supervisor, or registered professional engineer experienced in performance of this Work and licensed in State of Illinois.

1.7 SEQUENCING

A. Sequence balancing between completion of systems tested and Date of Substantial Completion.

PART 2 PRODUCTS

Not Used.

PART 3 EXECUTION

3.1 EXAMINATION

A. Verify systems are complete and operable before commencing work. Verify the following:
   1. Systems are started and operating in safe and normal condition.
   2. Temperature control systems are installed complete and operable.
   3. Proper thermal overload protection is in place for electrical equipment.
   4. Hydronic systems are flushed, filled, and vented.
   5. Pumps are rotating correctly.
   6. Proper strainer baskets are clean and in place or in normal position.
   7. Service and balancing valves are open.

3.2 PREPARATION

A. Furnish instruments required for testing, adjusting, and balancing operations.

B. Make instruments available to Architect/Engineer to facilitate spot checks during testing.

3.3 INSTALLATION TOLERANCES

A. Air Handling Systems: Adjust to within plus or minus 10 percent of design.

B. Air Outlets and Inlets: Adjust total to within plus 10 percent and minus 5 percent of design to space. Adjust outlets and inlets in space to within plus or minus 10 percent of design.

C. Hydronic Systems: Adjust to within plus or minus 10 percent of design.

3.4 ADJUSTING

A. Verify recorded data represents actual measured or observed conditions.

B. Permanently mark settings of valves, dampers, and other adjustment devices allowing settings to be restored. Set and lock memory stops.

C. After adjustment, take measurements to verify balance has not been disrupted. If disrupted, verify correcting adjustments have been made.

D. Report defects and deficiencies noted during performance of services, preventing system balance.

E. Leave systems in proper working order, replacing belt guards, closing access doors, closing doors to electrical switch boxes, and restoring thermostats to specified settings.

F. At final inspection, recheck random selections of data recorded in report. Recheck points or areas as selected and witnessed by Owner.

G. Check and adjust systems approximately six months after final acceptance and submit report.

3.5 WATER SYSTEM PROCEDURE

A. Adjust water systems, after air balancing, to obtain design quantities.

B. Use calibrated Venturi tubes, orifices, or other metered fittings and pressure gauges to determine flow rates for system balance. Where flow-metering devices are not installed, base flow balance on temperature difference across various heat transfer elements in system.

C. Adjust systems to obtain specified pressure drops and flows through heat transfer elements prior to thermal testing. Perform balancing by measurement of temperature differential in conjunction with air balancing.

D. Effect system balance with automatic control valves fully open or in normal position to heat transfer elements.

E. Effect adjustment of water distribution systems by means of balancing cocks, valves, and fittings. Do not use service or shut-off valves for balancing unless indexed for balance point.

F. Where available pump capacity is less than total flow requirements or individual system parts, simulate full flow in one part by temporary restriction of flow to other parts.

3.6 SCHEDULES

A. Equipment Requiring Testing, Adjusting, and Balancing:

1. Boilers.
2. Boiler Pumps.

B. Report Forms
1. Title Page:
   a. Name of Testing, Adjusting, and Balancing Agency
   b. Address of Testing, Adjusting, and Balancing Agency
   c. Telephone and facsimile numbers of Testing, Adjusting, and Balancing Agency
   d. Project name
   e. Project location
   f. Project Architect
   g. Project Engineer
   h. Project Contractor
   i. Project altitude
   j. Report date
2. Summary Comments:
   a. Design versus final performance
   b. Notable characteristics of system
   c. Description of systems operation sequence
   d. Summary of outdoor and exhaust flows to indicate building pressurization
   e. Nomenclature used throughout report
   f. Test conditions
3. Pump Data:
   a. Identification/number
   b. Manufacturer
   c. Size/model
   d. Impeller
   e. Service
   f. Design flow rate, pressure drop, BHP and kW
   g. Actual flow rate, pressure drop, BHP and kW
   h. Discharge pressure
   i. Suction pressure
   j. Total operating head pressure
   k. Shut off, discharge and suction pressures
   l. Shut off, total head pressure
4. Sound Level Report:
   a. Location
   b. Octave bands - equipment off
   c. Octave bands - equipment on
   d. RC level - equipment on
5. Combustion Test:
   a. Manufacturer
   b. Model number
   c. Serial number
   d. Firing rate
   e. Overfire draft
   f. Gas meter timing dial size
   g. Gas meter time per revolution
   h. Gas pressure at meter outlet
   i. Gas flow rate
   j. Heat input
   k. Burner manifold gas pressure
   l. Percent carbon monoxide (CO)
   m. Percent carbon dioxide (CO2)

n. Percent oxygen (O2)
o. Percent excess air
p. Flue gas temperature at outlet
q. Ambient temperature
r. Net stack temperature
s. Percent stack loss
t. Percent combustion efficiency
u. Heat output

END OF SECTION

SECTION 230700

HVAC INSULATION

PART 1 GENERAL

1.1 SUMMARY

A. Section Includes:
   1. HVAC piping insulation, jackets and accessories.
   2. HVAC equipment insulation, jackets and accessories.
   3. HVAC ductwork insulation, jackets, and accessories.

1.2 REFERENCES

A. ASTM International:
   1. ASTM C450 - Standard Practice for Fabrication of Thermal Insulating Fitting Covers for NPS Piping, and Vessel Lagging.
   2. ASTM C534 - Standard Specification for Preformed Flexible Elastomeric Cellular Thermal Insulation in Sheet and Tubular Form.
   3. ASTM C585 - Standard Practice for Inner and Outer Diameters of Rigid Thermal Insulation for Nominal Sizes of Pipe and Tubing (NPS System).
   4. ASTM C795 - Standard Specification for Thermal Insulation for Use in Contact with Austenitic Stainless Steel.
   5. ASTM C1136 - Standard Specification for Flexible, Low Permeance Vapor Retarders for Thermal Insulation.
   6. ASTM C1290 - Standard Specification for Flexible Fibrous Glass Blanket Insulation Used to Externally Insulate HVAC Ducts.
   7. ASTM D1785 - Standard Specification for Rigid Poly (Vinyl Chloride) (PVC) Compounds and Chlorinated Poly (Vinyl Chloride) (CPVC) Compounds.
   8. ASTM E96/E96M - Standard Test Methods for Water Vapor Transmission of Materials.
   9. ASTM E162 - Standard Test Method for Surface Flammability of Materials Using a Radiant Heat Energy Source.

B. Sheet Metal and Air Conditioning Contractors':
   1. SMACNA - HVAC Duct Construction Standard - Metal and Flexible.

1.3 SUBMITTALS

A. Product Data: Submit product description, thermal characteristics and list of materials and thickness for each service, and location.

B. Manufacturer's Installation Instructions: Submit manufacturers published literature indicating proper installation procedures.

1.4 QUALITY ASSURANCE

A. Test pipe insulation for maximum flame spread index of 25 and maximum smoke developed index of not exceeding 50 in accordance with ASTM E84.

B. Pipe insulation manufactured in accordance with ASTM C585 for inner and outer diameters.

C. Factory fabricated fitting covers manufactured in accordance with ASTM C450.

D. Duct insulation, Coverings, and Linings: Maximum 25/50 flame spread/smoke developed index, when tested in accordance with ASTM E84, using specimen procedures and mounting procedures of ASTM E 2231.

1.5 DELIVERY, STORAGE, AND HANDLING

A. Accept materials on site in original factory packaging, labeled with manufacturer's identification, including product density and thickness.

B. Protect insulation from weather and construction traffic, dirt, water, chemical, and damage, by storing in original wrapping.

1.6 ENVIRONMENTAL REQUIREMENTS

A. Install insulation only when ambient temperature and humidity conditions are within range recommended by manufacturer.

B. Maintain temperature before, during, and after installation for minimum period of 24 hours.

PART 2 PRODUCTS

2.1 MANUFACTURER

A. Manufacturers for Glass Fiber and Mineral Fiber Insulation Products:
1. CertainTeed.
2. Knauf.
3. Johns Manville.
4. Owens-Corning.

B. Manufacturers for Closed Cell Elastomeric Insulation Products:
1. Aeroflex. Aerocell.
2. Armacell, LLC. Armaflex.
3. Nomaco. K-flex.

2.2 PIPE INSULATION

A. TYPE P-1: ASTM C547, molded glass fiber pipe insulation.
1. Thermal Conductivity: 0.23 at 75 degrees F.
2. Operating Temperature Range: 0 to 850 degrees F.
3. Vapor Barrier Jacket: ASTM C1136, Type I, factory applied reinforced foil kraft with self-sealing adhesive joints.
4. Jacket Temperature Limit: minus 20 to 150 degrees F.

2.3 PIPE INSULATION JACKETS

A. PVC Plastic Pipe Jacket:
1. Product Description: ASTM D1785, One piece molded type fitting covers and sheet material, off-white color.
2. Thickness: 30 mil.
3. Connections: Brush on welding adhesive.

2.4 PIPE INSULATION ACCESSORIES

A. Vapor Retarder Lap Adhesive: Compatible with insulation.

B. Covering Adhesive Mastic: Compatible with insulation.

C. Piping 1-1/2 inches diameter and smaller: Galvanized steel insulation protection shield. MSS SP-69, Type 40. Length: Based on pipe size and insulation thickness.

D. Piping 2 inches diameter and larger: Wood insulation saddle, hard maple. Inserts length: not less than 6 inches long, matching thickness and contour of adjoining insulation.

E. Adhesives: Compatible with insulation.

2.5 EQUIPMENT INSULATION

A. TYPE E-3: ASTM C534, Type II, flexible, closed cell elastomeric insulation, sheet.
   1. Thermal Conductivity: 0.27 at 75 degrees F.
   2. Operating Temperature Range: Range: Minus 70 to 220 degrees F.

2.6 EQUIPMENT INSULATION JACKETS

A. PVC Plastic Equipment Jacket:
   1. Product Description: ASTM D1785, sheet material, off-white color.
   2. Minimum Service Temperature: -40degrees F.
   3. Maximum Service Temperature: 150degrees F.
   4. Water Vapor Permeance: ASTM E96/E96M; 0.02 perms.
   5. Thickness: 30 mil.
   6. Connections: Brush on welding adhesive.

2.7 EQUIPMENT INSULATION ACCESSORIES

A. Vapor Retarder Lap Adhesive: Compatible with insulation.

B. Covering Adhesive Mastic: Compatible with insulation.

C. Adhesives: Compatible with insulation.

PART 3 EXECUTION

3.1 EXAMINATION

A. Verify piping, equipment and ductwork has been tested before applying insulation materials.

B. Verify surfaces are clean and dry, with foreign material removed.

3.2 INSTALLATION - PIPING SYSTEMS

A. Piping Exposed to View in Finished Spaces: Locate insulation and cover seams in least visible locations.

B. Continue insulation through penetrations of building assemblies or portions of assemblies having fire resistance rating of one hour or less. Provide intumescent firestopping when continuing insulation through assembly. Finish at supports, protrusions, and interruptions. Piping Systems Conveying Fluids Below Ambient Temperature:
   1. Insulate entire system including fittings, valves, unions, flanges, strainers, flexible connections, pump bodies, and expansion joints.
   2. Furnish factory-applied or field-applied vapor retarder jackets. Secure factory-applied jackets with pressure sensitive adhesive self-sealing longitudinal laps and butt strips. Secure field-applied jackets with outward clinch expanding staples and seal staple penetrations with vapor retarder mastic.
   3. Insulate fittings, joints, and valves with molded insulation of like material and thickness as adjacent pipe. Finish with glass cloth and vapor retarder adhesive or PVC fitting covers.

C. Glass Fiber Board Insulation:
   1. Apply insulation close to equipment by grooving, scoring, and beveling insulation. Fasten insulation to equipment with studs, pins, clips, adhesive, wires, or bands.
   2. Fill joints, cracks, seams, and depressions with bedding compound to form smooth surface. On cold equipment, use vapor retarder cement.
   3. Cover wire mesh or bands with cement to a thickness to remove surface irregularities.

D. Inserts and Shields:
   1. Piping 1-1/2 inches Diameter and Smaller: Install galvanized steel shield between pipe hanger and insulation.
   2. Piping 2 inches Diameter and Larger: Install insert between support shield and piping and under finish jacket.
      a. Insert Configuration: Minimum 6 inches long, of thickness and contour matching adjoining insulation; may be factory fabricated.
      b. Insert Material: Compression resistant insulating material suitable for planned temperature range and service.
   3. Piping Supported by Roller Type Pipe Hangers: Install galvanized steel shield between roller and inserts.

E. Insulation Terminating Points:
   1. Coil Branch Piping 1 inch and Smaller: Terminate hot water piping at union upstream of the coil control valve.
   2. Chilled Water Coil Branch Piping: Insulate chilled water piping and associated components up to coil connection.
   3. Condensate Piping: Insulate entire piping system and components to prevent condensation.

F. Pipe Exposed in Mechanical Equipment Rooms or Finished Spaces (less than 8 feet above finished floor): Finish with PVC jacket and fitting covers.

G. Prepare pipe insulation for finish painting.

3.3 INSTALLATION - EQUIPMENT

A. Factory Insulated Equipment: Do not insulate.

B. Exposed Equipment: Locate insulation and cover seams in least visible locations.

C. Fill joints, cracks, seams, and depressions with bedding compound to form smooth surface. On cold equipment, use vapor retarder cement.

D. Equipment Containing Fluids Below Ambient Temperature:

1. Insulate entire equipment surfaces.
2. Apply insulation close to equipment by grooving, scoring, and beveling insulation. Fasten insulation to equipment with studs, pins, clips, adhesive, wires, or bands.
3. Furnish factory-applied or field-applied vapor retarder jackets. Secure factory-applied jackets with pressure sensitive adhesive self-sealing longitudinal laps and butt strips. Secure field-applied jackets with outward clinch expanding staples and seal staple penetrations with vapor retarder mastic.
4. Finish insulation at supports, protrusions, and interruptions.

E. Equipment Containing Fluids 140 degrees F Or Less:
1. Do not insulate flanges and unions, but bevel and seal ends of insulation.
2. Install insulation with factory-applied or field applied jackets, with or without vapor barrier. Finish with glass cloth and adhesive.
3. Finish insulation at supports, protrusions, and interruptions.

F. Equipment Containing Fluids Over 140 degrees F:
1. Insulate flanges and unions with removable sections and jackets.
2. Install insulation with factory-applied or field applied jackets, with or without vapor barrier. Finish with glass cloth and adhesive.
3. Finish insulation at supports, protrusions, and interruptions.

G. Equipment in Mechanical Equipment Rooms or Finished Spaces: Finish with PVC jacket and fitting covers.

H. Nameplates and ASME Stamps: Bevel and seal insulation around; do not cover with insulation.

I. Equipment Requiring Access for Maintenance, Repair, or Cleaning: Install insulation for easy removal and replacement without damage.

J. Prepare equipment insulation for finish painting.

3.4 SCHEDULES

A. Heating Services Piping Insulation Schedule:

PIPING SYSTEM	INSULATION TYPE	PIPE SIZE	INSULATION THICKNESS inches
Heating Water Supply and Return	P-1 or P-2	1-1/2 inches and smaller 2 inches and larger	1.5 2.0

B. Equipment Insulation Schedule:

EQUIPMENT	INSULATION TYPE	INSULATION THICKNESS inches
Air Separators	E-3	1.5
Expansion Tanks	E-3	1.5

END OF SECTION

SECTION 23 08 00

COMMISSIONING OF HVAC

PART 1 GENERAL

1.1 SUMMARY

A. Section Includes:
   1. HVAC commissioning description.
   2. HVAC commissioning responsibilities.

1.2 REFERENCES

A. Associated Air Balance Council:
   1. AABC - AABC Commissioning Guideline.

B. American Society of Heating, Refrigerating and Air-Conditioning Engineers:
   1. ASHRAE Guideline 1 - The HVAC Commissioning Process.

C. National Environmental Balancing Bureau:
   1. NEBB - Procedural Standards for Building Systems Commissioning.

1.3 COMMISSIONING DESCRIPTION

A. HVAC commissioning process includes the following tasks:
   1. Testing and startup of HVAC equipment and systems.
   2. Equipment and system verification checks.
   3. Assistance in functional performance testing to verify testing and balancing, and equipment and system performance.
   4. Provide qualified personnel to assist in commissioning tests, including seasonal testing.
   5. Complete and endorse functional performance test checklists provided by Commissioning Authority to assure equipment and systems are fully operational and ready for functional performance testing.
   6. Provide equipment, materials, and labor necessary to correct deficiencies found during commissioning process to fulfill contract and warranty requirements.
   7. Provide operation and maintenance information and record drawings to Commissioning Authority for review verification and organization, prior to distribution.
   8. Provide assistance to Commissioning Authority to develop, edit, and document system operation descriptions.
   9. Provide training for systems specified in this Section with coordination by Commissioning Authority.

B. Equipment and Systems to Be Commissioned:
   1. Pumps.
   2. Boilers.
   3. Piping systems.
   4. Equipment sound control.
   5. Equipment vibration control.
   6. Automatic temperature control system.
   7. Testing, Adjusting and Balancing work.

1.4 COMMISSIONING SUBMITTALS

A. Draft Forms: Submit draft of system verification form and functional performance test checklist.

B. Test Reports: Indicate data on system verification form for each piece of equipment and system as specified.

C. Field Reports: Indicate deficiencies preventing completion of equipment or system verification checks equipment or system to achieve specified performance.

1.5 CLOSEOUT SUBMITTALS

A. Project Record Documents: Record revisions to equipment and system documentation necessitated by commissioning.

B. Operation and Maintenance Data: Submit revisions to operation and maintenance manuals when necessary revisions are discovered during commissioning.

1.6 QUALITY ASSURANCE

A. Perform Work in accordance with ASHRAE Guideline 1.

B. Perform Work in accordance with local standard.

C. Maintain one copy of each document on site.

1.7 COMMISSIONING RESPONSIBILITIES

A. Equipment or System Installer Commissioning Responsibilities:
1. Attend commissioning meetings.
2. Ensure temperature controls installer performs assigned commissioning responsibilities as specified below.
3. Ensure testing, adjusting, and balancing agency performs assigned commissioning responsibilities as specified.
4. Provide instructions and demonstrations for Owner's personnel.
5. Ensure subcontractors perform assigned commissioning responsibilities.
6. Ensure participation of equipment manufacturers in appropriate startup, testing, and training activities when required by individual equipment specifications.
7. Develop startup and initial checkout plan using manufacturer’s startup procedures and functional performance checklists for equipment and systems to be commissioned.
8. During verification check and startup process, execute HVAC related portions of checklists for equipment and systems to be commissioned.
9. Perform and document completed startup and system operational checkout procedures, providing copy to Commissioning Authority.
10. Provide manufacturer’s representatives to execute starting of equipment. Ensure representatives are available and present during agreed upon schedules and are in attendance for duration to complete tests, adjustments and problem-solving.
11. Coordinate with equipment manufacturers to determine specific requirements to maintain validity of warranties.
12. Provide personnel to assist Commissioning Authority during equipment or system verification checks and functional performance tests.
13. Prior to functional performance tests, review test procedures to ensure feasibility, safety and equipment protection and provide necessary written alarm limits to be used during tests.

14. Prior to startup, inspect, check, and verify correct and complete installation of equipment and system components for verification checks included in commissioning plan. When deficient or incomplete work is discovered, ensure corrective action is taken and re-check until equipment or system is ready for startup.
15. Provide factory supervised startup services for equipment and systems. Coordinate work with manufacturer and Commissioning Authority.
16. Perform verification checks and startup on equipment and systems as specified.
17. Assist Commissioning Authority in performing functional performance tests on equipment and systems as specified.
18. Perform operation and maintenance training sessions scheduled by Commissioning Authority.
19. Conduct HVAC system orientation and inspection.

B. Temperature Controls Installer Commissioning Responsibilities:
1. Attend commissioning meetings.
2. Review design for ability of systems to be controlled including the following:
   a. Confirm proper hardware requirements exists to perform functional performance testing.
   b. Confirm proper safeties and interlocks are included in design.
   c. Confirm proper sizing of system control valves and actuators and control valve operation will result capacity control identified in Contract Documents.
   d. Confirm proper sizing of system control dampers and actuators and damper operation will result in proper damper positioning.
   e. Confirm sensors selected are within device ranges.
   f. Review sequences of operation and obtain clarification from Architect/Engineer.
   g. Indicate delineation of control between packaged controls and building automation system, listing BAS monitor points and BAS adjustable control points.
   h. Provide written sequences of operation for packaged controlled equipment. Equipment manufacturers' stock sequences may be included, when accompanied by additional narrative to reflect Project conditions.
3. Inspect, check, and confirm proper operation and performance of control hardware and software provided in other HVAC sections.
4. Submit proposed procedures for performing automatic temperature control system point-to-point checks to Commissioning Authority and Architect/Engineer.
5. Inspect check and confirm correct installation and operation of automatic temperature control system input and output device operation through point-to-point checks.
6. Perform training sessions to instruct Owner's personnel in hardware operation, software operation, programming, and application in accordance with commissioning plan.
7. Demonstrate system performance and operation to Commissioning Authority during functional performance tests including each mode of operation.
8. Provide control system technician to assist during Commissioning Authority verification check and functional performance testing.
9. Provide control system technician to assist testing, adjusting, and balancing agency during performance of testing, adjusting, and balancing work.
10. Assist in performing operation and maintenance training sessions scheduled by Commissioning Authority.

C. Testing, Adjusting, and Balancing Agency Commissioning Responsibilities:
1. Attend commissioning meetings.
2. Participate in verification of testing, adjusting, and balancing report for verification or diagnostic purposes. Repeat sample of 10 percent of measurements contained in testing, adjusting, and balancing report.
3. Assist in performing operation and maintenance training sessions scheduled by Commissioning Authority.

1.8 COMMISSIONING MEETINGS

A. Attend initial commissioning meeting and progress commissioning meetings as required by Commissioning Authority.

1.9 SCHEDULING

A. Prepare schedule indicating anticipated start dates for the following:
   1. Piping system pressure testing.
   2. Piping system flushing and cleaning.
   3. Ductwork pressure testing.
   4. Equipment and system startups.
   5. Automatic temperature control system checkout.
   6. Testing, adjusting, and balancing.
   7. HVAC system orientation and inspections.
   8. Operation and maintenance manual submittals.
   9. Training sessions.

B. Schedule seasonal tests of equipment and systems during peak weather conditions to observe full-load performance.

C. Schedule occupancy sensitive tests of equipment and systems during conditions of both minimum and maximum occupancy or use.

1.10 COORDINATION

A. Notify Commissioning Authority minimum of Two weeks in advance of the following:
   1. Scheduled equipment and system startups.
   2. Scheduled automatic temperature control system checkout.
   3. Scheduled start of testing, adjusting, and balancing work.

B. Coordinate programming of automatic temperature control system with construction and commissioning schedules.

PART 2 PRODUCTS

Not Used.

PART 3 EXECUTION

3.1 INSTALLATION

A. Place HVAC systems and equipment into full operation and continue operation during each working day of commissioning.

B. Install replacement sheaves and belts to obtain system performance, as requested by Commissioning Authority.

C. Install test holes in ductwork and plenums as requested by Commissioning Authority for taking air measurements.

D. Prior to start of functional performance test, install replacement filters in equipment as specified in individual section.

3.2 COMMISSIONING

A. Seasonal Sensitive Functional Performance Tests:
   1. Test heating equipment at winter design temperatures.
   2. Participate in testing delayed beyond Final Completion to test performance at peak seasonal conditions.

B. Be responsible to participate in initial and alternate peak season test of systems required to demonstrate performance.

C. Occupancy Sensitive Functional Performance Tests:
   1. Test equipment and systems affected by occupancy variations at minimum and peak loads to observe system performance.

END OF SECTION

SECTION 23 11 23

FACILITY NATURAL-GAS PIPING

PART 1 GENERAL

1.1 SUMMARY

A. Section Includes:
1. Natural gas piping above grade.
2. Unions and flanges.
3. Valves.
4. Pipe hangers and supports.
5. Strainers.
6. Natural gas pressure regulators.

1.2 REFERENCES

A. American National Standards Institute:
1. ANSI Z21.15 - Manually Operated Gas Valves for Appliances, Appliance Connector Valves and Hose End Valves.

B. American Society of Mechanical Engineers:
1. ASME B16.3 - Malleable Iron Threaded Fittings.
2. ASME B16.26 - Cast Copper Alloy Fittings for Flared Copper Tubes.
3. ASME B16.33 - Manually Operated Metallic Gas Valves for Use in Gas Piping Systems Up to 125 psig (sizes 1/2 - 2).
4. ASME B31.9 - Building Services Piping.
5. ASME Section IX - Boiler and Pressure Vessel Code - Welding and Brazing Qualifications.

C. ASTM International:
1. ASTM A53/A53M - Standard Specification for Pipe, Steel, Black and Hot-Dipped, Zinc-Coated, Welded and Seamless.
2. ASTM A234/A234M - Standard Specification for Piping Fittings of Wrought Carbon Steel and Alloy Steel for Moderate and High Temperature Service.
3. ASTM B88 - Standard Specification for Seamless Copper Water Tube.
4. ASTM B280 - Standard Specification for Seamless Copper Tube for Air Conditioning and Refrigeration Field Service.
5. ASTM B749 - Standard Specification for Lead and Lead Alloy Strip, Sheet, and Plate Products.
6. ASTM F708 - Standard Practice for Design and Installation of Rigid Pipe Hangers.

D. American Welding Society:
1. AWS D1.1 - Structural Welding Code - Steel.

E. National Fire Protection Association:
1. NFPA 54 - National Fuel Gas Code.

F. Underwriters Laboratories Inc.:
1. UL 842 - Valves for Flammable Fluids.

1.3 SYSTEM DESCRIPTION

A. Where more than one piping system material is specified, provide compatible system components and joints. Use non-conducting dielectric connections when joining dissimilar metals in systems.

B. Provide flanges, unions, or couplings at locations requiring servicing. Use unions, flanges, or couplings downstream of valves and at equipment connections. Do not use direct welded or threaded connections to valves, equipment.

C. Provide pipe hangers and supports in accordance with ASME B31.9.

D. Use ball valves for shut-off and to isolate equipment, part of systems, or vertical risers.

1.4 SUBMITTALS

A. Product Data:
   1. Piping: Submit data on pipe materials, fittings, and accessories. Submit manufacturers catalog information.
   2. Valves: Submit manufacturers catalog information with valve data and ratings for each service.
   3. Piping Specialties: Submit manufacturers catalog information including capacity, rough-in requirements, and service sizes for the following:
      a. Strainers.
      b. Natural gas pressure regulators.
      c. Natural gas pressure relief valves.

B. Design Data: Indicate pipe size. Indicate load carrying capacity of trapeze, multiple pipe, and riser support hangers.

C. Welders Certificates: Certify welders employed on the Work, verifying AWS qualification within previous 12 months.

1.5 CLOSEOUT SUBMITTALS

A. Project Record Documents: Record actual locations of valves, piping system, and system components.

B. Operation and Maintenance Data: Submit for valves and gas pressure regulators installation instructions, spare parts lists, and exploded assembly views.

1.6 QUALITY ASSURANCE

A. Perform natural gas Work in accordance with NFPA 54.

B. Perform Work in accordance with ASME B31.9 code for installation of piping systems and ASME Section IX for welding materials and procedures.

C. Perform Work in accordance with AWS D1.1 for welding hanger and support attachments to building structure.

D. Furnish shutoff valves complying with ASME B16.33 or ANSI Z21.15.

1.7 DELIVERY, STORAGE, AND HANDLING

A. Accept valves on site in shipping containers with labeling in place. Inspect for damage.

B. Protect piping and fittings from soil and debris with temporary end caps and closures. Maintain in place until installation. Furnish temporary protective coating on cast iron and steel valves.

1.8 FIELD MEASUREMENTS

A. Verify field measurements prior to fabrication.

PART 2 PRODUCTS

2.1 NATURAL GAS PIPING, ABOVE GRADE

A. Steel Pipe: ASTM A53/A53M Schedule 40 black.
   1. Fittings: ASME B16.3, malleable iron, or ASTM A234/A234M forged steel welding type.
   2. Joints: Threaded for pipe 2 inch and smaller; welded for pipe 2-1/2 inches and larger.

B. Corrugated Stainless Steel Tubing: ANSI LC 1.

2.2 REGULATOR VENT PIPING, ABOVE GRADE

A. Indoors: Same as natural gas piping, above grade.

2.3 UNIONS AND FLANGES

A. Unions for Pipe 2 inches and Smaller:
   1. Ferrous Piping: Class 150, malleable iron, threaded.
   2. Dielectric Connections: Union with galvanized or plated steel threaded end, copper solder end, water impervious isolation barrier.

2.4 BALL VALVES

A. Manufacturers:
   1. Crane Valve, North America
   2. Hammond Valve
   3. Milwaukee Valve Company
   4. NIBCO, Inc.
   5. Stockham Valves & Fittings

B. 1/4 inch to 1 inch: MSS SP 110, Class 125, two piece, threaded ends, bronze body, chrome plated bronze ball, reinforced teflon seats, blow-out proof stem, lever handle, UL 842 listed for flammable liquids and LPG, full port.

2.5 STRAINERS

A. Manufacturers:
   1. Mueller Steam Specialty
   2. O.C. Keckley Company
   3. Spirax Sarco, Inc.

B. 2 inch and Smaller: Screwed brass or iron body for 175 psig working pressure, Y pattern with 1/32 inch stainless steel perforated screen.

2.6 NATURAL GAS PRESSURE REGULATORS

A. Product Description: Spring loaded, general purpose, self-operating service regulator including internal relief type diaphragm assembly and vent valve. Diaphragm case can be rotated 360 degrees in relation to body.
   1. Comply with ANSI Z21.80.
   2. Temperatures: minus 20 degrees F to 150 degrees F.
   3. Body: Steel.
   4. Spring case, lower diaphragm casing, union ring, seat ring and disk holder: Aluminum.
   5. Disk, diaphragm, and O-ring: Nitrile.
   6. Maximum inlet pressure: 150 psig.
   7. Furnish sizes 2 inches and smaller with threaded ends.

PART 3 EXECUTION

3.1 EXAMINATION

A. Verify excavations are to required grade, dry, and not over-excavated.

3.2 PREPARATION

A. Ream pipe and tube ends. Remove burrs. Bevel plain end ferrous pipe.

B. Remove scale and dirt, on inside and outside, before assembly.

C. Prepare piping connections to equipment with flanges or unions.

3.3 INSTALLATION - ABOVE GROUND PIPING SYSTEMS

A. Install natural gas piping in accordance with NFPA 54.

B. Provide non-conducting dielectric connections wherever jointing dissimilar metals.

C. Route piping in orderly manner and maintain gradient.

D. Where required, bend pipe with pipe bending tools in accordance with procedures intended for that purpose.

E. Install piping to conserve building space and not interfere with use of space.

F. Size and install gas piping to provide sufficient gas to supply maximum appliance demand at pressure higher than appliance minimum inlet pressure.

G. Group piping whenever practical at common elevations.

H. Install piping to allow for expansion and contraction without stressing pipe, joints, or connected equipment.

I. Sleeve pipe passing through partitions, walls and floors.

J. Provide clearance for installation of insulation and access to valves and fittings.

K. Provide access where valves and fittings are not exposed.

L. Where pipe support members are welded to structural building framing, scrape, brush clean, weld, and apply one coat of zinc rich primer.

M. Provide support for utility meters in accordance with requirements of utility company.

N. Install vent piping from gas pressure reducing valves to outdoors and terminate in weatherproof hood. Protect vent against entry of insects and foreign material.
   1. Minimum Vent Size: Connection size at regulator vent connection.
   2. Run individual vent line from each relief device, independent of breather vents.

O. Breather vents may be manifolded together with piping sized for combined appliance vent requirements.

P. Prepare pipe, fittings, supports, and accessories not pre-finished, ready for finish painting.

Q. Install valves with stems upright or horizontal, not inverted.

R. Protect piping systems from entry of foreign materials by temporary covers, completing sections of the Work, and isolating parts of completed system.

3.4 FIELD QUALITY CONTROL

A. Where gas appliance will be damaged by test pressure, disconnect appliance and cap piping during pressure test. Reconnect appliance after pressure test and leak test connection.

B. Where gas appliance is designed for operating pressures equal to or greater than piping test pressure, provide gas valve to isolate appliance or equipment from gas test pressure.

C. Pressure test natural gas piping in accordance with NFPA 54.

D. Where new branch piping is extended from existing system, pressure test new branch piping only. Leak test joint between new and existing piping with noncorrosive leak detection fluid or other approved method.

E. When pressure tests do not meet specified requirements, remove defective work, replace and retest.

F. Immediately after gas is applied to a new system, or a system has been restored after gas service interruption, check pipe for leakage.
   1. Where leakage is detected, shut off gas supply until necessary repairs are complete.

G. Do not place appliances in service until leak testing and repairs are complete.

END OF SECTION

SECTION 23 21 13

HYDRONIC PIPING

PART 1 GENERAL

1.1 SUMMARY

A. Section Includes:
1. Heating water piping, above ground.
2. Equipment drains and over flows.
3. Unions and flanges.
4. Pipe hangers and supports.
5. Valves.

1.2 REFERENCES

A. American Society of Mechanical Engineers:
1. ASME B16.3 - Malleable Iron Threaded Fittings.
2. ASME B16.4 - Gray Iron Threaded Fittings.
3. ASME B16.18 - Cast Copper Alloy Solder Joint Pressure Fittings.
4. ASME B16.22 - Wrought Copper and Copper Alloy Solder Joint Pressure Fittings.
5. ASME B31.1 - Power Piping.
6. ASME B31.9 - Building Services Piping.
7. ASME Section IX - Boiler and Pressure Vessel Code - Welding and Brazing Qualifications.

B. ASTM International:
1. ASTM A53/A53M - Standard Specification for Pipe, Steel, Black and Hot-Dipped, Zinc-Coated, Welded and Seamless.
2. ASTM A234/A234M - Standard Specification for Piping Fittings of Wrought Carbon Steel and Alloy Steel for Moderate and High Temperature Service.
3. ASTM A395/A395M - Standard Specification for Ferritic Ductile Iron Pressure-Retaining Castings for Use at Elevated Temperatures.
4. ASTM A536 - Standard Specification for Ductile Iron Castings.
5. ASTM B32 - Standard Specification for Solder Metal.
6. ASTM B88 - Standard Specification for Seamless Copper Water Tube.
7. ASTM B584 - Standard Specification for Copper Alloy Sand Castings for General Applications.
8. ASTM D2235 - Standard Specification for Solvent Cement for Acrylonitrile-Butadiene-Styrene (ABS) Plastic Pipe and Fittings.
9. ASTM D2241 - Standard Specification for Polyethylene (PE) Plastic Pipe (SIDR-PR) Based on Controlled Inside Diameter.
10. ASTM F1476 - Standard Specification for Performance of Gasketed Mechanical Couplings for Use in Piping Applications.

C. American Welding Society:
1. AWS A5.8 - Specification for Filler Metals for Brazing and Braze Welding.
2. AWS D1.1 - Structural Welding Code - Steel.

1.3 SYSTEM DESCRIPTION

A. Where more than one piping system material is specified, provide compatible system components and joints. Use non-conducting dielectric connections whenever jointing dissimilar metals in open systems.

B. Provide flanges, union, and couplings at locations requiring servicing. Use unions, flanges, and couplings downstream of valves and at equipment or apparatus connections. Do not use direct welded or threaded connections to valves, equipment or other apparatus.

C. Provide pipe hangers and supports in accordance with ASME B31.9.

D. Use ball or butterfly valves for shut-off and to isolate equipment, part of systems, or vertical risers.

E. Use ball or butterfly valves for bypass, or manual flow control services.

F. Use spring loaded check valves on discharge of boiler pumps.

G. Use 3/4 inch ball valves with cap for drains at main shut-off valves, low points of piping, bases of vertical risers, and at equipment. Pipe to nearest floor drain.

1.4 SUBMITTALS

A. Shop Drawings: Indicate schematic layout of piping system, including equipment, critical dimensions, and sizes.

B. Product Data:
   1. Piping: Submit data on pipe materials, fittings, and accessories. Submit manufacturers catalog information.
   2. Valves: Submit manufacturers catalog information with valve data and ratings for each service.

C. Test Reports: Indicate results of piping system pressure test.

D. Manufacturer's Installation Instructions: Submit hanging and support methods, joining procedures and isolation.

E. Welders' Certificate: Include welders' certification of compliance with AWS D1.1.

1.5 CLOSEOUT SUBMITTALS

A. Project Record Documents: Record actual locations of valves, equipment and accessories.

B. Operation and Maintenance Data: Submit instructions for installation and changing components, spare parts lists, exploded assembly views.

1.6 QUALITY ASSURANCE

A. Perform Work in accordance with ASME B31.9 code for installation of piping systems and ASME Section IX for welding materials and procedures.

1.7 DELIVERY, STORAGE, AND HANDLING

A. Accept valves on site in shipping containers with labeling in place. Inspect for damage.

B. Provide temporary end caps and closures on piping and fittings. Maintain in place until installation.

C. Protect piping systems from entry of foreign materials by temporary covers, completing sections of the Work, and isolating parts of completed system.

PART 2 PRODUCTS

2.1 HEATING PIPING, ABOVE GROUND

A. Copper Tubing: ASTM B88, Type L, drawn.
   1. Fittings: ASME B16.18, cast brass, or ASME B16.22 solder wrought copper.

   2. Joints: Braze, AWS A5.8 BCuP silver/phosphorus/copper alloy with melting range 1190 to 1480 degrees F.

2.2 EQUIPMENT DRAINS AND OVERFLOWS

A. Copper Tubing: ASTM B88, Type DWV, L, drawn.
   1. Fittings: ASME B16.18, cast brass, or ASME B16.22 solder wrought copper.
   2. Joints: Solder, lead free, ASTM B32, 95-5 tin-antimony, or tin and silver, with melting range 430 to 535 degrees F.

2.3 UNIONS AND FLANGES

A. Unions for Pipe 2 inches and Smaller:
   1. Ferrous Piping: Class 150, malleable iron, threaded.
   2. Copper Piping: Class 150, bronze unions with brazed joints.
   3. Dielectric Connections: Union with galvanized or plated steel threaded end, copper solder end, water impervious isolation barrier.
   4. PVC Piping: PVC.
   5. CPVC Piping: CPVC.

B. Flanges for Pipe 2-1/2 inches and Larger:
   1. Ferrous Piping: Class 150, forged steel, slip-on flanges.
   2. Copper Piping: Class 150, slip-on bronze flanges.
   3. PVC Piping: PVC flanges.
   4. CPVC Piping: CPVC flanges.
   5. Gaskets: 1/16 inch thick preformed neoprene gaskets.

C. PVC Pipe Materials: For connections to equipment and valves with threaded connections, furnish solvent-weld socket to screwed joint adapters and unions, or ASTM D2464, Schedule 80, threaded, PVC pipe.

2.4 BALL VALVES

A. Manufacturers:
   1. Crane Valve, North America
   2. Hammond Valve
   3. Milwaukee Valve Company
   4. NIBCO, Inc.

B. 2 inches and Smaller: MSS SP 110, Class 150 bronze, two piece body, type 316 stainless steel ball, full port, teflon seats, blow-out proof stem, solder or threaded ends with union, lever handle.

2.5 BALANCING VALVES

A. Manufacturers:
   1. Tour and Anderson STAD
   2. Wheatley GS Series
   3. Armstong CBV Series

B. 2 inches and Smaller: Class 150 brass construction, female thread, Y-pattern globe style, minimum 5 turn, concealed locking balance point, flow measurement ports.

C. 2-1/2 inches and Larger: Class 150 cast iron construction, flanged, Y-pattern globe style, minimum 5 turn, concealed locking balance point, flow measurement ports.

2.6 BUTTERFLY VALVES

A. Manufacturers:
1. Crane Valve, North America
2. Hammond Valve
3. Milwaukee Valve Company
4. NIBCO, Inc.
5. Stockham Valves & Fittings

B. 2-1/2 inches and Larger: Class 150.
1. Body: Cast or ductile iron, lug ends, stainless steel stem, extended neck.
2. Disc: stainless steel.
3. Seat: Resilient replaceable EPDM.
4. Handle and Operator: 10 position lever handle.

PART 3 EXECUTION

3.1 EXAMINATION

A. Verify excavations are to required grade, dry, and not over-excavated.

3.2 PREPARATION

A. Ream pipe and tube ends. Remove burrs. Bevel plain end ferrous pipe.

B. Remove scale and dirt on inside and outside before assembly.

C. Prepare piping connections to equipment with flanges or unions.

D. Keep open ends of pipe free from scale and dirt. Protect open ends with temporary plugs or caps.

E. After completion, fill, clean, and treat systems.

3.3 INSTALLATION - ABOVE GROUND PIPING SYSTEMS

A. Install heating water piping in accordance with ASME B31.9.

B. Route piping parallel to building structure and maintain gradient.

C. Install piping to conserve building space, and not interfere with use of space.

D. Group piping whenever practical at common elevations.

E. Install piping to allow for expansion and contraction without stressing pipe, joints, or connected equipment.

F. Provide access where valves and fittings are not exposed.

G. Where pipe support members are welded to structural building framing, scrape, brush clean, and apply one coat of zinc rich primer to welds.

H. Prepare unfinished pipe, fittings, supports, and accessories, ready for finish painting.

I. Install valves with stems upright or horizontal, not inverted.

3.4 FIELD QUALITY CONTROL

A. Test water piping system per ASME B31.9.

END OF SECTION

SECTION 23 21 16

HYDRONIC PIPING SPECIALTIES

PART 1 GENERAL

1.1 SUMMARY

A. Section Includes:
1. Pressure gages.
2. Pressure gage taps.
3. Thermometers.
4. Thermometer supports.
5. Test plugs.
6. Flexible connectors.
7. Bladder-type expansion tanks.
8. Air vents.
9. Air separators.
10. Strainers.
11. Pump suction fittings.
12. Combination Pump discharge valves.
13. Balancing Valves.
14. Relief valves.

1.2 REFERENCES

A. American Society of Mechanical Engineers:
1. ASME B40.1 - Gauges - Pressure Indicating Dial Type - Elastic Element.
2. ASME Section VIII - Boiler and Pressure Vessel Code - Pressure Vessels.

B. ASTM International:
1. ASTM E1 - Standard Specification for ASTM Thermometers.
2. ASTM E77 - Standard Test Method for Inspection and Verification of Thermometers.

1.3 SUBMITTALS

A. Product Data: Submit for manufactured products and assemblies used in this Project.
1. Manufacturer’s data and list indicating use, operating range, total range, accuracy, and location for manufactured components.
2. Submit product description, model, dimensions, component sizes, rough-in requirements, service sizes, and finishes.
3. Submit schedule indicating manufacturer, model number, size, location, rated capacity, load served, and features for each piping specialty.
4. Submit electrical characteristics and connection requirements.

B. Manufacturer's Installation Instructions: Submit hanging and support methods, joining procedures, application, selection, and hookup configuration. Include pipe and accessory elevations.

C. Manufacturer's Certificate: Certify products meet or exceed specified requirements.

1.4 CLOSEOUT SUBMITTALS

A. Project Record Documents: Record actual locations of actual locations of components and instrumentation, flow controls.

B. Operation and Maintenance Data: Submit instructions for calibrating instruments, installation instructions, assembly views, servicing requirements, lubrication instruction, and replacement parts list.

1.5 DELIVERY, STORAGE, AND HANDLING

A. Accept piping specialties on site in shipping containers with labeling in place. Inspect for damage.

B. Provide temporary protective coating on cast iron and steel valves.

C. Protect systems from entry of foreign materials by temporary covers, caps and closures, completing sections of the work, and isolating parts of completed system until installation.

1.6 ENVIRONMENTAL REQUIREMENTS

A. Do not install instruments when areas are under construction, except rough in, taps, supports and test plugs.

PART 2 PRODUCTS

2.1 PRESSURE GAGES

A. Manufacturers:
1. Trerice.
2. Weiss.
3. Taylor.
4. Ametek.

B. Gage: ASME B40.1, UL 393 with bourdon tube, rotary brass movement, brass socket, front calibration adjustment, black scale on white background.
1. Case: Cast aluminum.
2. Bourdon Tube: Phosphor bronze.
3. Dial Size: 4-1/2 inch diameter.
4. Mid-Scale Accuracy: One percent.
5. Scale: Psi.

2.2 PRESSURE GAGE TAPS

A. Ball Valve: Brass1/4 inch NPT for 250 psi.

B. Pulsation Damper: Pressure snubber, brass with 1/4 inch NPT connections.

C. Siphon: Brass, 1/4 inch NPT angle or straight pattern.

2.3 STEM TYPE THERMOMETERS

A. Manufacturers:
1. Trerice.
2. Weiss.
3. Taylor.
4. Amerek.

B. Thermometer: ASTM E1, red appearing mercury, lens front tube, cast aluminum case with enamel finish.
   1. Size: 9 inch scale.
   2. Window: Clear Lexan.
   3. Stem: Brass, 3/4 inch NPT, 3-1/2 inch long.
   4. Accuracy: ASTM E77 2 percent.
   5. Calibration: Degrees F.

2.4 THERMOMETER SUPPORTS

A. Socket: Brass separable sockets for thermometer stems with or without extensions.

B. Flange: 3 inch outside diameter reversible flange, designed to fasten to sheet metal air ducts, with brass perforated stem.

2.5 TEST PLUGS

A. 1/4 inch NPT or 1/2 inch NPT brass fitting and cap for receiving 1/8 inch outside diameter pressure or temperature probe with:
   1. Neoprene core for temperatures up to 200 degrees F.
   2. Nordel core for temperatures up to 350 degrees F.
   3. Viton core for temperatures up to 400 degrees F.

B. Test Kit:
   1. Carrying case, internally padded and fitted containing:
      a. Two 2-1/2 inch diameter pressure gages.
         1) Scale range: 0 to 100 psi
      b. Two gage adapters with 1/8 inch probes.
      c. Two 1-1/2 inch dial thermometers.
         1) Scale range: 30 to 100 degrees F.
         2) Scale range: 100 to 200 degrees F.

2.6 FLEXIBLE CONNECTORS

A. Manufacturers:
   1. Flexonics.
   2. Vibration Isolator.
   3. Mason.

B. Corrugated stainless steel hose with single layer of stainless steel exterior braiding, minimum 9 inches long with copper tube ends; for maximum working pressure 300 psig.

2.7 BLADDER-TYPE EXPANSION TANKS

A. Manufacturers:
   1. Bell & Gossett.
   2. Taco.
   3. Amtrol.
   4. Armstrong.

B. Construction: Welded steel, tested and stamped in accordance with ASME Section VIII; supplied with National Board Form U-1, rated for working pressure of 125 psig, with flexible butyl bladder sealed into tank, and steel support stand.

C. Accessories: Pressure gage and air-charging fitting, tank drain; pre-charge to pressure listed on drawings.

D. Automatic Cold Water Fill Assembly: Pressure reducing valve, reduced pressure back flow prevention device, test cocks, strainer, vacuum breaker, and by-pass valves.

E. Size: As scheduled on the drawings.

2.8 AIR VENTS

A. Manufacturers:
1. Bell & Gossett.
2. Taco.
3. Amtrol.
4. Armstrong.

B. Manual Type: Short vertical sections of 2 inch diameter pipe to form air chamber, with 1/8 inch brass needle valve at top of chamber.

C. Float Type: Brass or semi-steel body, copper, polypropylene, or solid non-metallic float, stainless steel valve and valve seat; suitable for system operating temperature and pressure; with isolating valve.

D. Washer Type: Brass with hydroscopic fiber discs, vent ports, adjustable cap for manual shut-off, and integral spring loaded ball check valve.

2.9 AIR SEPARATORS

A. Manufacturers:
1. Bell & Gossett.
2. Taco.
3. Amtrol.
4. Armstrong.

B. Dip Tube Fitting: For 125 psig operating pressure; to prevent free air collected in boiler from rising into system.

C. In-line Air Separators: Cast iron for sizes 1-1/2 inch and smaller, or steel for sizes 2 inch and larger; tested and stamped in accordance with ASME Section VIII; for 125 psig operating pressure.

D. Combination Air Separators/Strainers: Steel, tested and stamped in accordance with ASME Section VIII; for 125 psig operating pressure, with integral bronze strainer, tangential inlet and outlet connections, and internal stainless steel air collector tube.

2.10 STRAINERS

A. Manufacturers:
1. Amtrol.
2. Watts.
3. Armstrong.

B. Size 2 inch and Smaller: Screwed brass or iron body for 175 psig working pressure, Y pattern with 1/32 inch stainless steel perforated screen.

C. Size 2-1/2 inch to 4 inch: Flanged iron body for 175 psig working pressure, Y pattern with 3/64 inch stainless steel perforated screen.

2.11 PUMP SUCTION FITTINGS

A. Manufacturers:
   1. Bell & Gossett.
   2. Armstrong.
   3. Aurora.

B. Fitting: Angle pattern, cast-iron body. Threaded for 2 inch and smaller, flanged for 2-1/2 inch and larger. Rated for 175 psig working pressure, with inlet vanes, cylinder strainer with 3/16 inch diameter openings, disposable fine mesh strainer to fit over cylinder strainer, and permanent magnet located in flow stream and removable for cleaning.

C. Accessories: Adjustable foot support, blow-down tapping in bottom, gage tapping in side.

2.12 COMBINATION PUMP DISCHARGE VALVES

A. Manufacturers:
   1. Bell & Gossett.
   2. Wheatley.
   3. Taco.

B. Valves: Straight or angle pattern, flanged cast-iron valve body with bolt-on bonnet for 175 psig operating pressure, non-slam check valve with spring-loaded bronze disc and seat, stainless steel stem, and calibrated adjustment permitting flow regulation.

C. Manufacturer shall provide Cv rating for every 10% increment of valve opening. Brass readout valves shall be provided for differential pressure measurement.

2.13 BALANCING VALVES

A. Manufacturers:
   1. Bell & Gossett.
   2. Tour Anderson.
   3. Aurora.
   4. Nexus.

B. Construction: Brass or bronze body with union on inlet, and outlet, temperature and pressure test plug on inlet and outlet.

C. Calibration: Control within 5 percent of design flow over entire operating pressure.

D. Control Mechanism: Stainless steel or nickel plated brass piston or regulator cup, operating against stainless steel helical or wave formed spring.

E. Accessories: In-line strainer on inlet and ball valve on outlet.

2.14 RELIEF VALVES

A. Bronze body, Teflon seat, stainless steel stem and springs, automatic, direct pressure actuated capacities ASME certified and labeled.

PART 3 EXECUTION

3.1 INSTALLATION - THERMOMETERS AND GAGES

A. Install one pressure gage for each pump, locate taps before strainers and on suction and discharge of pump; pipe to gage.

B. Install gage taps in piping

C. Install pressure gages with pulsation dampers. Provide ball valve to isolate each gage. Extend nipples to allow clearance from insulation.

D. Install thermometers in piping systems in sockets in short couplings. Enlarge pipes smaller than 2-1/2 inches for installation of thermometer sockets. Allow clearance from insulation.

E. Install thermometer sockets adjacent to controls systems thermostat, transmitter, or sensor sockets.

F. Coil and conceal excess capillary on remote element instruments.

G. Provide instruments with scale ranges selected according to service with largest appropriate scale.

H. Install gages and thermometers in locations where they are easily read from normal operating level. Install vertical to 45 degrees off vertical.

I. Adjust gages and thermometers to final angle, clean windows and lenses, and calibrate to zero.

3.2 INSTALLATION - HYDRONIC PIPING SPECIALTIES

A. Locate test plugs adjacent to thermometers and thermometer sockets.

B. Where large air quantities accumulate, provide enlarged air collection standpipes.

C. Install manual air vents at system high points.

D. For automatic air vents in ceiling spaces or other concealed locations, provide ¾” threaded end with hose connection.

E. Provide air separator on suction side of system circulation pump and connect to expansion tank.

F. Provide drain and hose connection with valve on strainer blow down connection.

G. Provide pump suction fitting on suction side of base mounted centrifugal pumps. Remove temporary strainers after cleaning systems.

H. Provide combination pump discharge valve on discharge side of base mounted centrifugal pumps.

I. Support pump fittings with floor mounted pipe and flange supports.

J. Provide relief valves on pressure tanks, low-pressure side of reducing valves and expansion tanks.

K. Select system relief valve capacity greater than make-up pressure reducing valve capacity. Select equipment relief valve capacity to exceed rating of connected equipment.

L. Pipe relief valve outlet to nearest floor drain.

M. Where one line vents several relief valves, make cross sectional area equal to sum of individual vent areas.

3.3 PROTECTION OF INSTALLED CONSTRUCTION

A. Do not install hydronic pressure gauges until after systems are pressure tested.

END OF SECTION

SECTION 23 21 23

HYDRONIC PUMPS

PART 1 GENERAL

1.1 SUMMARY

A. Section Includes:
   1. Vertical In-line pumps.

1.2 REFERENCES

A. National Electrical Manufacturers Association:
   1. NEMA 250 - Enclosures for Electrical Equipment (1000 Volts Maximum).

B. Underwriters Laboratories Inc.:
   1. UL 778 - Motor Operated Water Pumps.

1.3 PERFORMANCE REQUIREMENTS

A. Provide pumps to operate at system fluid temperatures without vapor binding and cavitation, are non-overloading in parallel or individual operation, and operate within 25 percent of midpoint of published maximum efficiency curve.

1.4 SUBMITTALS

A. Product Data: Submit certified pump curves showing performance characteristics with pump and system operating point plotted. Include NPSH curve when applicable. Include electrical characteristics and connection requirements. Submit also, manufacturer model number, dimensions, service sizes, and finishes.

B. Manufacturer's Installation Instructions: Submit application, selection, and hookup configuration with pipe and accessory elevations. Submit hanging and support requirements and recommendations.

1.5 CLOSEOUT SUBMITTALS

A. Operation and Maintenance Data: Submit installation instructions, servicing requirements, assembly views, lubrication instructions, and replacement parts list.

1.6 DELIVERY, STORAGE, AND HANDLING

A. Protect systems from entry of foreign materials by temporary covers, completing sections of the work, and isolating parts of completed system.

PART 2 PRODUCTS

2.1 VERTICAL IN-LINE PUMPS

A. Type: Vertical, single stage, close coupled, radial or horizontally split casing, for in-line mounting, for 175 psig working pressure.

B. Casing: Cast iron with suction and discharge gage port, casing wear ring, seal flush connection, drain plug, flanged suction and discharge.

C. Impeller: Stainless steel, fully enclosed, keyed directly to motor shaft or extension.

D. Shaft: Carbon steel with stainless steel impeller cap screw or nut and bronze sleeve.

E. Shaft Sleeve: Aluminum bronze.

F. Seal: Carbon rotating against stationary ceramic seat, 212

PART 3 EXECUTION

3.1 INSTALLATION

A. Provide pumps to operate at specified system fluid temperatures without vapor binding and cavitation, are non-overloading in parallel or individual operation, and operate within 25 percent of midpoint of published maximum efficiency curve.

B. Install long radius reducing elbows or reducers between pump and piping. Support piping adjacent to pump so no weight is carried on pump casings. For close coupled or base mounted pumps, install supports under elbows on pump suction and discharge line sizes 4 inches and over.

C. Install pumps on vibration isolators.

D. Install flexible connectors at or near pumps where piping configuration does not absorb vibration.

E. Provide line sized shut-off valve and strainer on pump suction, and line sized combination pump discharge valve on pump discharge.

F. Decrease from line size with long radius reducing elbows or reducers. Support piping adjacent to pump so no weight is carried on pump casings.

G. Provide air cock and drain connection on horizontal pump casings.

H. Lubricate pumps before start-up.

END OF SECTION

SECTION 23 52 34

HIGH EFFICIENCY CONDENSING BOILERS

PART 1 GENERAL

1.1 SUMMARY

A. Section Includes:
   1. High efficiency condensing.
   2. Boiler controls.
   3. Boiler trim.

1.2 REFERENCES

A. American National Standards Institute:
   1. ANSI Z21.13 - Gas-fired Low Pressure Steam and Hot Water Boilers.

B. American Society of Heating, Refrigerating and Air-Conditioning Engineers:
   1. ASHRAE 90.1 - Energy Standard for Buildings Except Low-Rise Residential Buildings.

C. American Society of Mechanical Engineers:
   1. ASME Section IV - Boiler and Pressure Vessel Code - Heating Boilers.
   2. ASME Section VIII - Boiler and Pressure Vessel Code - Pressure Vessels.

D. Hydronics Institute:
   1. H.I. Heating Boiler Standard - Testing and Rating Standard for Heating Boilers.

E. National Electrical Manufacturers Association:
   1. NEMA 250 - Enclosures for Electrical Equipment (1000 Volts Maximum).

F. National Fire Protection Association:
   1. NFPA 54 - National Fuel Gas Code.

1.3 SUBMITTALS

A. Product Data: Submit capacities and accessories included with boiler. Include general layout, dimensions, size and location of water, fuel, electric and vent connections, electrical characteristics, weight and mounting loads.

B. Manufacturer's Installation Instructions: Submit assembly, support details, connection requirements, and include start-up instructions.

C. Manufacturers Field Reports: Indicate condition of equipment after start-up including control settings and performance chart of control system.

1.4 CLOSEOUT SUBMITTALS

A. Operation and Maintenance Data: Submit manufacturer's descriptive literature, operating instructions, cleaning procedures, replacement parts list, and maintenance and repair data.

1.5 QUALITY ASSURANCE

A. Conform to ASME Section IV for construction of boilers. Provide boilers registered with National Board of Boiler and Pressure Vessel Inspectors.

B. Boiler Performance Requirements: Conform to minimum efficiency prescribed by ASHRAE 90.1 when tested in accordance with H.I. Heating Boiler Standard.

C. Unit Certification: AGA certified.

D. Conform to applicable code for internal wiring of factory wired equipment.

E. Products Requiring Electrical Connection: Listed and classified by Underwriters' Laboratories, Inc., as suitable for purpose specified and indicated.

1.6 DELIVERY, STORAGE, AND HANDLING

A. Accept boilers and accessories on site in factory shipping packaging. Inspect for damage.

B. Protect boilers from damage by leaving packing in place until installation.

PART 2 PRODUCTS

2.1 HIGH EFFICIENCY CONDENSING BOILERS

A. Manufacturers:
   1. Lochinvar Corp.
   2. Cleaver Brooks.
   3. Superior Boilers.
   4. Aerco.

B. Product Description: natural gas packaged, modulating, sealed combustion, power-vented, high efficiency gas-fired boiler(s) with cast aluminum sectional heat exchangers.

C. Boiler(s) shall be 93% minimum I=B=R thermal efficient as required by BTS 2000.

D. Boiler shall be capable of full modulation firing with a turn down of up to 5 to 1.

E. Boiler(s) shall be manufactured by ISO 9001 registered company to conform to Section IV of the ASME Boiler and Pressure Vessel Code:
   1. Stainless Steel heat exchanger fire tested and hydrostatically pressure tested at factory in accordance with ASME requirements.
   2. Maximum allowable working pressure 80 PSIG water as listed on the rating label.
   3. Factory Assembled and Tested.

F. Boiler(s) main components:
   1. Sealed combustion chamber with separation from sediment and lime.
   2. Gas valve designed with negative pressure regulation.
   3. The burner shall be premix combustion type, made with stainless steel providing a wide range of modulating firing rates.
   4. Variable speed blower system, capable of modulating the boiler firing rate from 100% to 10%.
   5. Control feature to allow the air/fuel ratio through a minimum 5 to 1 turndown ratio.

6. Electronic display for boiler set-up, boiler status, and boiler diagnostics.

G. Venting and Combustion Air:
1. Capable of using outside air piped directly to boiler for combustion.
2. The boiler shall be direct vent or direct exhaust using stainless steel, double wall venting. PVC or CPVC.
3. Integral condensate collector in the vent adapter to capture condensate from the vent system.

H. Boiler Trim
1. All electrical components to be high quality manufacture and bear UL label.
2. Boiler must be CSD-1 compliant with factory report for ASME CDS-1.
3. Water boiler(s) controls furnished:
   a. High limit temperature control with manual reset 190 degrees F maximum allowable boiler water temperature.
   b. Combination pressure-temperature gauge. Gauge dial clearly marked and easy to read.
   c. ASME certified pressure relief valve, set to relieve at 30 PSIG.
   d. Flue gas, outlet water temperature, and return water temperature sensors.
   e. Low water protection with manual reset.
   f. High and Low gas pressure switches with manual reset and indicator lights.
   g. Built-in freeze protection.
4. Boiler Control to be UL 353 Listed with:
   a. The unit shall be complete with BACnet communication interface for future BAS interface.
   b. 4 pump contacts.
   c. Indoor outdoor reset.
   d. Outdoor sensor
   e. Interface for all control and sensor points.
   f. Variable temperature zone that requires NO MIXING valves.
   g. Multiple LCD digital temperature access points including supply, return, system temps, flug gas temp.
   h. LCD display and keypad access.
   i. Alarm contact includes flame failure, high temperature and low water cut off.
   j. Remote modulation capable for Boiler Systems and Building Automation Systems.
   k. Capable of controlling addition multiple boilers by either sending 0-10 volt DC signal or contact closure.

PART 3 EXECUTION

3.1 INSTALLATION

A. Install boilers plumb and level, to plus or minus 1/16 inch over boiler base.

B. Maintain manufacturer's recommended clearances around and over boilers.

C. Install boiler on concrete housekeeping pad, minimum 3-1/2 inches high and 6 inches larger than boiler base on each side.

D. Connect natural gas piping in accordance with NFPA 54.

E. Connect natural gas piping to boiler, full size of boiler gas train inlet. Arrange piping with clearances for burner removal and service.

F. Connect hot water piping to supply and return boiler connections.

G. Install discharge piping from relief valves and drain valves to nearest floor drain.

H. Install boiler trim and accessories furnished loose for field mounting.

I. Install electrical devices furnished loose for field mounting.

J. Install control wiring between boiler control panel and field mounted control devices.

K. Connect flue to boiler outlet, full size of outlet.

3.2 FIELD QUALITY CONTROL

A. Perform combustion test.

B. Arrange with local authorities having jurisdiction for inspection of boiler, piping, and for certificate of operation.

3.3 CLEANING

A. Flush and clean boilers upon completion of installation, in accordance with manufacturer's start-up instructions.

3.4 MANUFACTURER'S FIELD SERVICES

A. Start-up boilers according to manufacturer's start-up instructions and in presence of boiler manufacturer's representative, general contractor, sub-contractor, engineer and owner. Test controls and demonstrate compliance with requirements. Adjust burners for maximum efficiency. Replace damaged or malfunctioning controls and equipment.

3.5 DEMONSTRATION AND TRAINING

A. Demonstrate operation and maintenance procedures.

B. Furnish services for manufacturer’s technical representative for one 8 hours day to instruct Owner’s personnel in operation and maintenance of boilers. Schedule training with Owner/Engineer. Provide at least 7 days notice to Engineer of training date.

END OF SECTION

SECTION 26 05 00

COMMON WORK RESULTS FOR ELECTRICAL

PART 1 GENERAL

1.1 SUMMARY

A. The electrical work included in all other divisions is the responsibility of the contractor performing the Division 26 work unless noted otherwise.

B. Scope

1. The work under this section includes basic electrical requirements, which are applicable to all Division 26 sections. This section includes information common to two or more technical specification sections or items that are of a general nature, not conveniently fitting into other technical sections. Included are the following topics:
   a. PART 1 - GENERAL
      1) Project Overview
      2) Scope
      3) Related Work
      4) Reference Standards
      5) Regulatory Requirements
      6) Quality Assurance
      7) Continuity of Existing Services and Systems
      8) Approved Electrical Testing Laboratories
      9) Sealing and Fire Stopping
      10) Intent
      11) Omissions
      12) Work Sequence and Scheduling
      13) Salvage Materials
      14) Certificates and Inspections
   b. PART 2 - PRODUCTS
      1) Access Panels and Doors
   c. PART 3 - EXECUTION
      1) Excavation and Backfill
      2) Concrete Work
      3) Equipment Access
      4) Coordination
      5) Housekeeping and Clean Up

1.2 REFERENCES

A. Abbreviations of standards organizations referenced in this and other sections are as follows:

1. ANSI American National Standards Institute
2. ASTM American Society for Testing and Materials
3. EPA Environmental Protection Agency
4. ETL Electrical Testing Laboratories, Inc.
5. IEEE Institute of Electrical and Electronics Engineers
6. IES Illuminating Engineering Society
7. ISA Instrument Society of America
8. NBS National Bureau of Standards
9. NEC National Electric Code
10. NEMA National Electrical Manufacturers Association

11. NESC National Electrical Safety Code
12. NFPA National Fire Protection Association
13. UL Underwriters Laboratories Inc.

1.3 REGULATORY REQUIREMENTS

A. All work and materials are to conform in every detail to applicable rules and requirements of the National Electrical Code (NFPA 70), other applicable National Fire Protection Association codes, the National Electrical Safety Code, and present manufacturing standards (including NEMA).

1.4 QUALITY ASSURANCE

A. Where equipment or accessories are used which differ in arrangement, configuration, dimensions, ratings, or engineering parameters from those indicated on the contract documents, the contractor is responsible for all costs involved in integrating the equipment or accessories into the system and the assigned space, and for obtaining the performance from the system into which these items are placed.

B. Manufacturer references used herein are intended to establish a level of quality and performance requirements unless more explicit restrictions are stated to apply.

C. All materials, except medium voltage equipment and components, shall be listed by and shall bear the label of an approved electrical testing laboratory. If none of the approved electrical testing laboratories has published standards for a particular item, then other national independent testing standards, if available, applicable, shall apply and such items shall bear those labels. Where one of the approved electrical testing laboratories has an applicable system listing and label, the entire system, except for medium voltage equipment and components, shall be so labeled.

D. Provide individual motor test for all motors 15HP and larger. Test shall be standard NEMA production test consisting of the following:
1. Locked Rotor Current
2. High Potential Test

1.5 CONTINUITY OF EXISTING SERVICE AND SYSTEMS

A. No outages shall be permitted on existing systems except at the time and during the interval specified by the Owner. Any outage must be scheduled when the interruption causes the least interference with normal institutional schedules and business routines. No extra costs will be paid to the Contractor for such outages which must occur outside of regular weekly working hours.

B. This Contractor shall restore any circuit interrupted as a result of this work to proper operation as soon as possible. Note that operations are on a seven-day week schedule.

1.6 APPROVED ELECTRICAL TESTING LABORATORIES

A. The following laboratories are approved for providing electrical product safety testing and listing services as required in these specifications:
1. Underwriters Laboratories Inc.
2. Electrical Testing Laboratories, Inc.

1.7 SEALING AND FIRESTOPPING

A. Sealing and fire stopping of sleeves/openings between conduits, cable trays, wireways, troughs, cablebus, busduct, etc. and the sleeve, structural or partition opening shall be the responsibility of the contractor whose work penetrates the opening. Provide all fire stopping of fire rated penetrations and sealing of smoke rated penetrations in compliance with section 07 84 13 Penetration Firestopping.

1.8 INTENT

A. The Contractor shall furnish and install all the necessary materials, apparatus, and devices to complete the electrical equipment and systems installation herein specified, except such parts as are specifically exempted herein.

B. If an item is either called for in the specifications or shown on the plans, it shall be considered sufficient for the inclusion of said item in this contract. If a conflict exists within the Specifications or exists within the Drawings, the Contractor shall furnish the item, system, or workmanship, which is the highest quality, largest, or most closely fits the intent (as determined by the Engineer). Refer to the General Conditions of the Contract for further clarification.

C. It must be understood that the details and drawings are diagrammatic. The Contractor shall verify all dimensions at the site and be responsible for their accuracy.

D. All sizes as given are minimum except as noted.

E. Materials and labor shall be new (unless noted or stated otherwise), first class, and workmanlike, and shall be subject at all times to the A/E's inspections, tests and approval from the commencement until the acceptance of the completed work.

F. Whenever a particular manufacturer's product is named, it is intended to establish a level of quality and performance requirements unless more explicit restrictions are stated to apply

1.9 OMISIONS

A. No later than ten (10) days before bid opening, the Contractor shall call the attention of the Engineer to any materials or apparatus the Contractor believes to be inadequate and to any necessary items of work omitted

1.10 WORK SEQUENCE AND SCHEDULING

A. Install work in phases to accommodate Owner’s requirements. During the construction period coordinate electrical schedule and operations with General Contractor.

1.11 SALVAGED MATERIALS

A. No materials removed from this project shall be reused except as noted on the Drawings. All materials removed shall become the property of and shall be disposed of by the Contractor.

1.12 CERTIFICATES AND INSPECTIONS

A. Obtain and pay for all required installation inspections. Deliver originals of these certificates to the Owner.

PART 2 PRODUCTS

2.1 ACCESS DOORS AND PANELS

A. Lay-in Ceilings:
   1. Removable lay-in ceiling tiles in 2 x 2 foot or 2 x 4 foot configuration provided under other divisions are sufficient; no additional access provisions are required unless specifically indicated.

B. Plaster Walls and Ceilings:
   1. 16 gauge frame with not less than a 20 gauge hinged door panel, prime coated steel for general applications, stainless steel for use in toilets, showers and similar wet areas, concealed hinges, screwdriver operated cam latch for general application, key lock for use in public areas, UL listed for use in fire rated partitions if required by the application. Use the largest size access opening possible, consistent with the space and the equipment needing service; minimum size is 12" by 12".

PART 3 EXECUTION

3.1 EXCAVATION AND BACKFILL

A. Perform all excavation and backfill work to accomplish indicated electrical systems installation in accordance with Division 01.

3.2 EQUIPMENT ACCESS

A. Install all piping, conduit, ductwork, and accessories to permit access to equipment for maintenance. Coordinate the exact location of wall and ceiling access panels and doors with the General Contractor, making sure that access is available for all equipment and specialties. Where access is required in plaster or drywall walls or ceilings, furnish the access doors to the General Contractor and reimburse the General Contractor for installation of those access door.

3.3 COORDINATION

A. The Contractor shall cooperate with other trades and the Owner in locating work in a proper manner. Should it be necessary to raise or lower or move longitudinally any part of the electrical work to better fit the general installation, such work shall be done at no extra cost to the Owner, provided such decision is reached prior to actual installation. The Contractor shall check location of electrical outlets with respect to other installations before installing.

B. The Contractor shall verify that all devices are compatible for the surfaces on which they will be used. This includes, but is not limited to light fixtures, panelboards, devices, etc. and recessed or semi-recessed heating units installed in/on architectural surfaces.

C. Coordinate all work with other contractors prior to installation. Any installed work that is not coordinated and that interferes with other contractor's work shall be removed or relocated at the installing contractor's expense.

D. Verify the integrity of any fire or smoke rating on these surfaces.

3.4 HOUSEKEEPING AND CLEAN UP

A. The Contractor shall clean up and remove from the premises, on a daily basis, all debris and rubbish resulting from its work and shall repair all damage to new and existing equipment resulting from its work. When job is complete, this Contractor shall remove all tools, excess material and equipment, etc., from the site.

3.5 MOTOR TESTING

A. Provide meggar test for all motors 15 HP and larger at startup or within 2 weeks prior to startup or 2 weeks after startup.

END OF SECTION

SECTION 26 05 02

ELECTRICAL DEMOLITION FOR REMODELING

PART 1 GENERAL

1.1 SUMMARY

A. Section Includes:
   1. Disconnection of existing electrical services to existing plant for total demolition.

1.2 RELATED WORK

A. Applicable provisions of Division 01 govern work under this section.

PART 2 PRODUCTS

2.1 MATERIALS AND EQUIPMENT

A. Materials and equipment for patching and extending work as specified in the individual Sections.

PART 3 EXECUTION

3.1 EXAMINATION

A. Verify that abandoned wiring and equipment serve only abandoned facilities.

B. Verify whether or not PCB ballasts exist in light fixtures which will be disposed of. If PCB light fixture ballasts exist, then follow requirements in PCB BALLAST HANDLING and LAMP AND PCB BALLAST DISPOSAL below.

C. Demolition Drawings are based on casual field observation and/or existing record documents. Report discrepancies to the Architect/Engineer before disturbing existing installation.

D. Beginning of demolition means installer accepts existing conditions.

3.2 PREPARATION

A. Disconnect electrical systems in walls, floors, and ceilings scheduled for removal.

B. Coordinate utility service outages with the Owner, General Contractor, and Architect/Engineer. Also, coordinate utility service outages with the local Utility Company.

C. Provide temporary wiring and connections to maintain existing systems in service during construction. When work must be performed on energized equipment or circuits, use personnel experienced in such operations and follow the safe working practice requirements of NFPA 70E.

3.3 PCB BALLAST HANDLING

A. Generally, all high-power factor fluorescent light ballasts manufactured before 1978 and some HID ballasts contain polychlorinated biphenyl (PCB) compounds in their capacitors. The Contractor shall inspect all ballasts in all light fixtures and take the actions described below.

B. The disposal of all ballasts labeled as "NON-PCBs" or "NO PCBs" shall become the responsibility of the Contractor. If the PCB content is not stated on the ballast label, the ballast shall be handled as a PCB ballast.

C. All PCB ballasts shall be removed from the light fixtures and shall have the wires clipped off. However, before removal, all PCB ballasts shall be carefully inspected for leaks. If a ballast appears to be leaking (evidenced by potting compound leaking out or by an oily film on the ballast surface) the ballast must be handled per EPA and DNR PCB regulations. Basically, this means the ballast is to be carefully removed from the fixture and placed in an approved drum. See paragraph below for the drum specifications. The person removing the ballast from the fixture shall wear protective gloves, eye protection, and protective clothing as necessary.

D. If the fixture has also been contaminated, it must be cleaned to less than 10 micrograms/100 square centimeters contamination before disposal. This cleaning must be done by an approved PCB contractor and is not considered a part of this contract.

E. The PCB ballasts shall then be placed in US DOT approved drums (barrels). The contractor may furnish their own drums or obtain them from Lamp Recyclers Incorporated (800-558-1166). The quantity and size of the drums will be determined by the contractor at the time of construction, 30 and 55 gallon drums are typically available.

F. These PCB drums shall be placed in storage with the cover that came with the barrels, in a location within a building, as designated by the Engineer. The drums are not to be placed outside where they are exposed to weather.

G. THESE PCB BALLASTS ARE NOT TO BE REMOVED FROM THE WORK SITE BY THE CONTRACTOR. To do so would be a violation of DNR and DOT hazardous waste regulations and may result in a fine to the Contractor.

H. The Contractor shall label and mark the PCB storage drums with EPA approved PCB labels and the storage area with signs, marks and lines to meet the State of Illinois regulations regarding Management of PCBs and Products Containing PCBs.

I. The Contractor shall also provide approved PCB absorbent materials to be stored immediately adjacent to the drum storage area. Do not place loose absorbent material in the drums.

J. The Contractor shall provide to the Engineer, in written form, a total count of these ballasts (or their total weight by drum) and where they are stored.

K. See Lamp and PCB Ballast Disposal instructions below.

3.4 LAMP AND PCB BALLAST DISPOSAL

A. All lamps (fluorescent, incandescent, and HID) contain mercury and/or lead (in the base) as well as other heavy metals and compounds which are regulated by the EPA and DNR during the disposal process. As a result, regulations have been issued covering the handling and

disposal of all lamps. Lamps which have been removed from service for disposal shall be handled as follows by the Contractor.

B. The Contractor shall very carefully remove all lamps (fluorescent, incandescent, and HID) from light fixtures before removal of the fixture from its mounted position. This is to reduce the likelihood that the lamp(s) will be broken. The Contractor will be charged the cost difference between disposal of broken and unbroken lamps, for all lamps broken in excess of 1% of the total lamps removed in the project.

C. The contractor shall contact Lamp Recyclers Incorporated (800-558-1166) to coordinate the storage and pickup of disposed lamps and PCB ballasts. The contractor may furnish their own containers or obtain them from Lamp Recyclers Incorporated. Removed lamps and PCB ballasts shall be placed in containers by the contractor, marked with the number and type of lamp and PCB ballast, and placed in storage at a location on the user agency's property. The contractor shall label the area as "Hazardous Material Storage". The contractor shall make arrangements for pickup of the lamps and PCB ballasts with Lamp Recyclers Incorporated, shall provide a count of all stored lamps and PCB ballasts, and shall fill out any required forms.

END OF SECTION

SECTION 26 05 19

LOW-VOLTAGE ELECTRICAL POWER CONDUCTORS AND CABLES

PART 1 GENERAL

1.1 SUMMARY

A. Section includes building wire and cable, and wiring connectors and connections.

B. Related Sections:
   1. Section 26 05 53 - Identification for Electrical Systems: Product requirements for wire identification.

1.2 REFERENCES

A. International Electrical Testing Association:
   1. NETA ATS - Acceptance Testing Specifications for Electrical Power Distribution Equipment and Systems.

B. National Fire Protection Association:
   1. NFPA 70 - National Electrical Code.
   2. NFPA 262 - Standard Method of Test for Flame Travel and Smoke of Wires and Cables for Use in Air-Handling Spaces.

C. Underwriters Laboratories, Inc.:
   1. UL 1277 - Standard for Safety for Electrical Power and Control Tray Cables with Optional Optical-Fiber Members.

1.3 SYSTEM DESCRIPTION

A. Product Requirements: Provide products as follows:
   1. Solid conductor for feeders and branch circuits 10 AWG and smaller.
   2. Stranded conductors for control circuits.
   3. Conductor not smaller than 12 AWG for power and lighting circuits.
   4. Conductor not smaller than 14 AWG for control circuits.
   5. Increase wire size in branch circuits to limit voltage drop to a maximum of 3 percent.

B. Wiring Methods: Provide the following wiring methods:
   1. Concealed Dry Interior Locations: Use only building wire, Type THHN/THWN or XHHW insulation in raceway.
   2. Exposed Dry Interior Locations: Use only Type THHN/THWN or XHHW insulation in raceway.
   3. Above Accessible Ceilings: Use only Type THHN/THWN or XHHW insulation in raceway.
   4. Wet or Damp Interior Locations: Use only Type XHHW insulation in raceway.
   5. Exterior Locations: Use only XHHW insulation in raceway.
   6. Underground Locations: Use only Type XHHW insulation in raceway.

1.4 DESIGN REQUIREMENTS

A. Conductor sizes are based on copper.

1.5 QUALITY ASSURANCE

A. Provide wiring materials located in plenums with peak optical density not greater than 0.5, average optical density not greater than 0.15, and flame spread not greater than 5 feet (1.5 m) when tested in accordance with NFPA 262.

1.6 QUALIFICATIONS

A. Manufacturer: Company specializing in manufacturing products specified in this section with minimum three years of experience.

1.7 FIELD MEASUREMENTS

A. Verify field measurements are as indicated on Drawings.

1.8 COORDINATION

A. Where wire and cable destination is indicated and routing is not shown, determine routing and lengths required.

B. Wire and cable routing indicated is approximate unless dimensioned

PART 2 PRODUCTS

2.1 BUILDING WIRE

A. Product Description: Single conductor insulated wire.

B. Conductor: Copper.

C. Insulation Voltage Rating: 600 volts.

D. Insulation Temperature Rating: 90 degrees C.

2.2 WIRING CONNECTORS

A. Split Bolt Connectors: Not acceptable.

B. Solderless Pressure Connectors: High copper alloy terminals may be used only for cable termination to equipment pads or terminal. Not approved for splicing.

C. Spring Wire Connectors: Solderless spring type pressure connectors with insulating covers for copper wire splices and taps. Use for conductor sizes 10 AWG and smaller.

D. Compression Connectors: Long barrel; seamless, tin-plated electrolytic copper tubing; internally beveled barrel ends. Conductor shall be clearly marked with the wire size and type and proper number and location of crimps.

E. Mechanical Connectors: Bolted type; tin-plated; high conductivity copper alloy; spacer between conductors; beveled cable entrances.

2.3 TERMINATIONS

A. Terminal Lugs for Wires 6 AWG and Smaller: Solderless, compression type copper.

B. Lugs for Wires 4 AWG and Larger: Color keyed, compression type copper, with insulating sealing collars.

PART 3 EXECUTION

3.1 EXAMINATION

A. Verify interior of building has been protected from weather.

B. Verify mechanical work likely to damage wire and cable has been completed.

C. Verify raceway installation is complete and supported.

3.2 PREPARATION

A. Completely and thoroughly swab raceway before installing wire.

3.3 EXISTING WORK

A. Remove exposed abandoned wire and cable , including abandoned wire and cable above accessible ceiling finishes. Patch surfaces where removed cables pass through building finishes.

B. Disconnect abandoned circuits and remove circuit wire and cable. Remove abandoned boxes when wire and cable servicing boxes is abandoned and removed. Install blank cover for abandoned boxes not removed.

C. Provide access to existing wiring connections remaining active and requiring access. Modify installation or install access panel.

D. Extend existing circuits using materials and methods compatible with existing electrical installations or as specified.

E. Clean and repair existing wire and cable remaining or wire and cable to be reinstalled.

3.4 INSTALLATION

A. Route wire and cable to meet Project conditions.

B. Neatly train and lace wiring inside boxes, equipment, and panelboards.

C. Identify and color code wire and cable under provisions of Section 26 05 53. Identify each conductor with its circuit number or other designation indicated.

D. Special Techniques--Building Wire in Raceway:
   1. Pull conductors into raceway at same time.
   2. Install building wire 4 AWG and larger with pulling equipment and suitable wire pulling lubricant.

E. Special Techniques - Wiring Connections:
   1. Clean conductor surfaces before installing lugs and connectors.

2. Make splices, taps, and terminations to carry full ampacity of conductors with no perceptible temperature rise.
3. Tape uninsulated conductors and connectors with electrical tape to 150 percent of insulation rating of conductor.
4. Install solderless pressure connectors with insulating covers for copper conductor splices and taps, 8 AWG and smaller.
5. Install insulated spring wire connectors with plastic caps for copper conductor splices and taps, 10 AWG and smaller.

F. Install terminal lugs on ends of 600-volt wires unless lugs are furnished on connected device, such as circuit breakers.

G. Size lugs in accordance with manufacturer's recommendations terminating wire sizes. Install 2-hole type lugs to connect wires 4 AWG and larger to copper bus bars.

H. For terminal lugs fastened together such as on motors, transformers, and other apparatus, or when space between studs is small enough that lugs can turn and touch each other, insulate for dielectric strength of 2-1/2 times normal potential of circuit.

3.5 WIRE COLOR

A. General:
1. For wire sizes 10 AWG and smaller, install wire colors in accordance with the following:
a. Orange, brown, and yellow for circuits at 120/208 volts or 277/480 volts single or three phase.
2. For wire sizes 8 AWG and larger, identify wire with colored tape at terminals, splices and boxes. Colors are as follows:
a. Orange, brown, and yellow for circuits at 120/208 volts or 277/480 volts single or three phase.

B. Neutral Conductors: White. When two or more neutrals are located in one conduit, individually identify each with proper circuit number.

C. Branch Circuit Conductors: Install three or four wire home runs with each phase uniquely color coded.

D. Feeder Circuit Conductors: Uniquely color code each phase.

E. Ground Conductors:
1. For 6 AWG and smaller: Green.
2. For 4 AWG and larger: Identify with green tape at both ends and visible points including junction boxes.

END OF SECTION

SECTION 26 05 26

GROUNDING AND BONDING FOR ELECTRICAL SYSTEMS

PART 1 GENERAL

1.1 SUMMARY

A. Section Includes:
1. Wire.
2. Mechanical connectors.
3. Exothermic connections.

1.2 REFERENCES

A. Institute of Electrical and Electronics Engineers:
1. IEEE 142 - Recommended Practice for Grounding of Industrial and Commercial Power Systems.
2. IEEE 1100 - Recommended Practice for Powering and Grounding Electronic Equipment.

B. International Electrical Testing Association:
1. NETA ATS - Acceptance Testing Specifications for Electrical Power Distribution Equipment and Systems.

C. National Fire Protection Association:
1. NFPA 70 - National Electrical Code.
2. NFPA 99 - Standard for Health Care Facilities.

1.3 SYSTEM DESCRIPTION

A. Grounding systems use the following elements as grounding electrodes:
1. Existing Metal underground water pipe.
2. Metal building frame.
3. Concrete-encased electrode.
4. Ground ring.
5. Rod electrode.
6. Plate electrode.

1.4 QUALITY ASSURANCE

A. Provide grounding materials conforming to requirements of NEC, IEEE 142, and UL labeled.

1.5 QUALIFICATIONS

A. Manufacturer: Company specializing in manufacturing Products specified in this section with minimum three years' experience.

PART 2 PRODUCTS

2.1 WIRE

A. Material: Stranded copper.

B. Grounding Electrode Conductor: Bare copper conductor.

C. Bonding Conductor: Bare copper conductor.

2.2 MECHANICAL CONNECTORS

A. Description: Bronze connectors, compression type applied with compression tool, suitable for grounding and bonding applications, in configurations required for installation.

2.3 EXOTHERMIC CONNECTIONS

A. Manufacturers:
1. Bundy
2. Erico
3. Harger

B. Product Description: Exothermic materials, accessories, and tools for preparing and making permanent field connections between grounding system components.

PART 3 EXECUTION

3.1 PREPARATION

A. Remove paint, rust, mill oils, and any other surface contaminants as needed at connection points.

3.2 EXISTING WORK

A. Modify existing grounding system to maintain continuity to accommodate renovations and new equipment.

B. Extend existing grounding system using materials and methods compatible with existing electrical installations or as specified.

3.3 INSTALLATION

A. Install rod electrodes at location near new service equipment. Equipment Grounding Conductor: Install separate, insulated conductor within each feeder and branch circuit raceway. Terminate each end on suitable lug, bus, or bushing.

B. Connect to site grounding system.

C. Accomplish grounding of electrical system by using insulated grounding conductor installed with feeders and branch circuit conductors in conduits. Size grounding conductors in accordance with NEC. Install from grounding bus of serving panel to ground bus of served panel, grounding screw of receptacles, lighting fixture housing, light switch outlet boxes or metal enclosures of service equipment. Ground conduits by means of grounding bushings on terminations at panelboards with installed number 12 conductor to grounding bus.

D. Grounding electrical system using continuous metal raceway system enclosing circuit conductors in accordance with NEC.

E. Permanently attach equipment and grounding conductors prior to energizing equipment.

3.4 FIELD QUALITY CONTROL

A. Inspect grounding and bonding system conductors for tightness and proper installation.

END OF SECTION

SECTION 26 05 29

HANGERS AND SUPPORTS FOR ELECTRICAL SYSTEMS

PART 1 GENERAL

1.1 SUMMARY

A. Section Includes:
1. Conduit supports.
2. Formed steel channel.
3. Spring steel clips.
4. Sleeves.
5. Mechanical sleeve seals.
6. Firestopping relating to electrical work.
7. Firestopping accessories.
8. Equipment bases and supports.

1.2 REFERENCES

A. ASTM International:
1. ASTM E84 - Standard Test Method for Surface Burning Characteristics of Building Materials.
2. ASTM E119 - Standard Test Methods for Fire Tests of Building Construction and Materials.
3. ASTM E814 - Standard Test Method for Fire Tests of Through-Penetration Fire Stops.
4. ASTM E1966 - Standard Test Method for Fire-Resistive Joint Systems.

B. National Fire Protection Association:
1. NFPA 70 - National Electrical Code.

C. Underwriters Laboratories Inc.:
1. UL 263 - Fire Tests of Building Construction and Materials.
2. UL 723 - Tests for Surface Burning Characteristics of Building Materials.
3. UL 1479 - Fire Tests of Through-Penetration Firestops.
4. UL 2079 - Tests for Fire Resistance of Building Joint Systems.
5. UL - Fire Resistance Directory.

D. Intertek Testing Services (Warnock Hersey Listed):
1. WH - Certification Listings.

1.3 DEFINITIONS

A. Firestopping (Through-Penetration Protection System): Sealing or stuffing material or assembly placed in spaces between and penetrations through building materials to arrest movement of fire, smoke, heat, and hot gases through fire rated construction.

1.4 QUALIFICATIONS

A. Manufacturer: Company specializing in manufacturing Products specified in this section with minimum three years of documented experience.

B. Installer: Company specializing in performing work of this section with minimum 3 years of experience.

1.5 ENVIRONMENTAL REQUIREMENTS

A. Do not apply firestopping materials when temperature of substrate material and ambient air is below 60 degrees F.

B. Maintain this minimum temperature before, during, and for minimum 3 days after installation of firestopping materials.

PART 2 PRODUCTS

2.1 CONDUIT SUPPORTS

A. Materials and Finishes: Corrosion resistant.

B. Hanger Rods: Threaded high tensile strength galvanized carbon steel with free-running threads.

C. Beam Clamps: Malleable Iron, with tapered hole in base and back to accept either bolt or hanger rod. Set screw: hardened steel.

D. Conduit clamps for trapeze hangers: Galvanized steel, notched to fit trapeze with single bolt to tighten.

E. Conduit clamps - general purpose: One-hole malleable iron for surface mounted conduits.

F. Cable Ties: High-strength nylon temperature rated to 185 degrees F. Self locking.

2.2 FORMED STEEL CHANNEL

A. Manufacturers:
1. Unistrut
2. Substitutions: B-Line

B. Product Description: Galvanized 12 gage thick steel. With holes 1-1/2 inches on center.

2.3 SPRING STEEL CLIPS

A. Manufacturers:
1. Caddy
2. Substitutions: B-Line

B. Product Description: Mounting hole and screw closure.

2.4 SLEEVES

A. Sleeves through Non-fire Rated Floors: 18 gage thick galvanized steel.

B. Sleeves through Non-fire Rated Beams, Walls, Footings, and Potentially Wet Floors: Steel pipe or 18 gage thick galvanized steel.

C. Sleeves through Fire Rated and Fire Resistive Floors and Walls, and Fire Proofing: Prefabricated fire rated sleeves including seals, UL listed.

D. Fire-stopping Insulation: Glass fiber type, non-combustible.

2.5 MECHANICAL SLEEVE SEALS

A. Product Description: Modular mechanical type, consisting of interlocking synthetic rubber links shaped to continuously fill annular space between object and sleeve, connected with bolts and pressure plates causing rubber sealing elements to expand when tightened, providing watertight seal and electrical insulation.

2.6 FIRESTOPPING

A. Product Description: Different types of products by multiple manufacturers are acceptable as required to meet specified system description and performance requirements; provide only one type for each similar application.
   1. Silicone Firestopping Elastomeric Firestopping: Single component silicone elastomeric compound and compatible silicone sealant.
   2. Foam Firestopping Compounds: Single component foam compound.
   3. Firestop Pillows: Formed mineral fiber pillows.

B. Color: Dark gray.

2.7 FIRESTOPPING ACCESSORIES

A. Installation Accessories: Provide clips, collars, fasteners, temporary stops or dams, and other devices required to position and retain materials in place.

B. General:
   1. Furnish UL listed products.
   2. Select products with rating not less than rating of wall or floor being penetrated.

C. Non-Rated Surfaces:
   1. Stamped steel, chrome plated, hinged, split ring escutcheons or floor plates or ceiling plates for covering openings in occupied areas where conduit is exposed.
   2. For exterior wall openings below grade, furnish modular mechanical type seal consisting of interlocking synthetic rubber links shaped to continuously fill annular space between conduit and cored opening or water-stop type wall sleeve.

PART 3 EXECUTION

3.1 PREPARATION

A. Clean substrate surfaces of dirt, dust, grease, oil, loose material, or other matter affecting bond of firestopping material.

B. Remove incompatible materials affecting bond.

C. Obtain permission from Architect/Engineer before drilling or cutting structural members.

3.2 INSTALLATION - HANGERS AND SUPPORTS

A. Anchors and Fasteners:
   1. Concrete Structural Elements: Provide precast inserts, expansion anchors and preset inserts.
   2. Steel Structural Elements: Provide beam clamps and spring steel clips.
   3. Concrete Surfaces: Provide self-drilling anchors and expansion anchors.
   4. Hollow Masonry, Plaster, and Gypsum Board Partitions: Provide toggle bolts and hollow wall fasteners.

5. Solid Masonry Walls: Provide expansion anchors and preset inserts.
6. Sheet Metal: Provide sheet metal screws.
7. Wood Elements: Provide wood screws.

B. Inserts:
1. Install inserts for placement in concrete forms.
2. Install inserts for suspending hangers from reinforced concrete slabs and sides of reinforced concrete beams.
3. Provide hooked rod to concrete reinforcement section for inserts carrying pipe over 4 inches.
4. Where concrete slabs form finished ceiling, locate inserts flush with slab surface.
5. Where inserts are omitted, drill through concrete slab from below and provide through-bolt with recessed square steel plate and nut flush with top of slab.

C. Install conduit and raceway support and spacing in accordance with NEC.

D. Do not fasten supports to pipes, ducts, mechanical equipment, or conduit.

E. Install multiple conduit runs on common hangers.

F. Supports:
1. Fabricate supports from structural steel or formed steel channel. Install hexagon head bolts to present neat appearance with adequate strength and rigidity. Install spring lock washers under nuts.
2. Install surface mounted cabinets and panelboards with minimum of four anchors.
3. In wet and damp locations install steel channel supports to stand cabinets and panelboards 1 inch off wall.
4. Support vertical conduit at every floor.

3.3 INSTALLATION - FIRESTOPPING

A. Use firestop pillows when possible. Use other products only if pillows will not work for the application.

B. Install material at fire rated construction perimeters and openings containing penetrating sleeves, piping, ductwork, conduit and other items, requiring firestopping.

C. Apply primer where recommended by manufacturer for type of firestopping material and substrate involved, and as required for compliance with required fire ratings.

D. Apply firestopping material in sufficient thickness to achieve required fire and smoke rating to uniform density and texture.

E. Fire-Rated Surface:
1. Seal opening at floor, wall, ceiling, and roof as follows:
   a. Install sleeve with bushings through opening and extending beyond minimum of 1 inch on both sides of building element.
   b. Size sleeve allowing minimum of 1 inch void between sleeve and building element.
   c. Pack void with backing material.
   d. Seal ends of sleeve with UL listed fire resistive silicone compound to meet fire rating of structure penetrated.
2. Where cable tray and conduit penetrates fire rated surface, install firestopping product in accordance with manufacturer's instructions.

F. Non-Rated Surfaces:
1. Seal opening through non-fire rated wall, floor, ceiling, and roof opening as follows:

a. Install sleeve with bushings through opening and extending beyond minimum of 1 inch on both sides of building element.
b. Size sleeve allowing minimum of 1 inch void between sleeve and building element.
c. Install type of firestopping material recommended by manufacturer.

2. Install escutcheons where conduit, penetrates non-fire rated surfaces in occupied spaces. Occupied spaces include rooms with finished ceilings and where penetration occurs below finished ceiling.
3. Exterior wall openings below grade: Assemble rubber links of mechanical seal to size of conduit and tighten in place, in accordance with manufacturer's instructions.

3.4 INSTALLATION - EQUIPMENT BASES AND SUPPORTS

A. Provide housekeeping pads of concrete, minimum 3-1/2 inches thick and extending 6 inches beyond supported equipment.

B. Using templates furnished with equipment, install anchor bolts, and accessories for mounting and anchoring equipment.

C. Construct supports of formed steel channel. Brace and fasten with flanges bolted to structure.

3.5 INSTALLATION - SLEEVES

A. Exterior watertight entries: Seal with adjustable interlocking rubber links.

B. Conduit penetrations not required to be watertight: Sleeve and fill with silicon foam.

C. Set sleeves in position in forms. Provide reinforcing around sleeves.

D. Size sleeves large enough to allow for movement due to expansion and contraction. Provide for continuous insulation wrapping.

E. Extend sleeves through floors 1 inch above finished floor level. Caulk sleeves.

F. Where conduit or raceway penetrates floor, ceiling, or wall, close off space between conduit or raceway and adjacent work with stuffing insulation and caulk. Provide close fitting metal collar or escutcheon covers at both sides of penetration.

G. Install chrome plated steel escutcheons at finished surfaces.

3.6 PROTECTION OF FINISHED WORK

A. Protect adjacent surfaces from damage by material installation.

END OF SECTION

SECTION 26 05 33

RACEWAY AND BOXES FOR ELECTRICAL SYSTEMS

PART 1 GENERAL

1.1 SUMMARY

A. Section includes conduit and tubing, surface raceways, wireways, outlet boxes, pull and junction boxes, and handholes.

B. Related Sections:
1. Section 26 05 26 - Grounding and Bonding for Electrical Systems.
2. Section 26 05 29 - Hangers and Supports for Electrical Systems.
3. Section 26 05 53 - Identification for Electrical Systems.

1.2 REFERENCES

A. American National Standards Institute:
1. ANSI C80.1 - Rigid Steel Conduit, Zinc Coated.
2. ANSI C80.3 - Specification for Electrical Metallic Tubing, Zinc Coated.
3. ANSI C80.5 - Aluminum Rigid Conduit - (ARC).

B. National Electrical Manufacturers Association:
1. NEMA 250 - Enclosures for Electrical Equipment (1000 Volts Maximum).
2. NEMA FB 1 - Fittings, Cast Metal Boxes, and Conduit Bodies for Conduit and Cable Assemblies.
3. NEMA OS 1 - Sheet Steel Outlet Boxes, Device Boxes, Covers, and Box Supports.
4. NEMA OS 2 - Nonmetallic Outlet Boxes, Device Boxes, Covers, and Box Supports.
5. NEMA RN 1 - Polyvinyl Chloride (PVC) Externally Coated Galvanized Rigid Steel Conduit and Intermediate Metal Conduit.
6. NEMA TC 2 - Electrical Polyvinyl Chloride (PVC) Tubing and Conduit.
7. NEMA TC 3 - PVC Fittings for Use with Rigid PVC Conduit and Tubing.

1.3 SYSTEM DESCRIPTION

A. Raceway and boxes located as indicated on Drawings, and at other locations required for splices, taps, wire pulling, equipment connections, and compliance with regulatory requirements. Raceway and boxes are shown in approximate locations unless dimensioned. Provide raceway to complete wiring system.

B. Wet and Damp Locations: Provide thin-wall nonmetallic conduit. Provide cast metal or nonmetallic outlet, junction, and pull boxes. Provide flush mounting outlet box in finished areas. (Unless directed otherwise on project drawings.)

C. Concealed Dry Locations: Provide electrical metallic tubing. Provide sheet-metal boxes. Provide flush mounting outlet box in finished areas. Provide hinged enclosure for large pull boxes. (Unless directed otherwise on project drawings.)

D. Exposed Dry Locations: Provide electrical metallic tubing. Provide sheet-metal boxes. Provide flush mounting outlet box in finished areas. Provide hinged enclosure for large pull boxes. (Unless directed otherwise on project drawings.)

1.4 DESIGN REQUIREMENTS

A. Minimum Raceway Size: 3/4 inch (19 mm) unless otherwise specified.

1.5 DELIVERY, STORAGE, AND HANDLING

A. Protect conduit from corrosion and entrance of debris by storing above grade. Provide appropriate covering.

B. Protect PVC conduit from sunlight.

1.6 COORDINATION

A. Coordinate mounting heights, orientation and locations of outlets mounted above counters, benches, and backsplashes.

PART 2 PRODUCTS

2.1 METAL CONDUIT

A. Rigid Galvanized Steel (RGS) Conduit:

B. Fittings and Conduit Bodies: NEMA FB 1; material to match conduit.

2.2 FLEXIBLE METAL CONDUIT

A. Product Description: Interlocked steel construction.

B. Fittings: NEMA FB 1.

2.3 LIQUIDTIGHT FLEXIBLE METAL CONDUIT

A. Product Description: Interlocked steel construction with PVC jacket.

B. Fittings: NEMA FB 1.

C. Provide outdoor- and UV-rated materials as required for installation location.

2.4 ELECTRICAL METALLIC TUBING (EMT)

A. Product Description: ANSI C80.3; galvanized tubing.

B. Fittings and Conduit Bodies: NEMA FB 1; steel set screw type.

2.5 NONMETALLIC CONDUIT

A. Product Description: NEMA TC 2; Schedule 40 and Schedule 80 PVC.

B. Fittings and Conduit Bodies: NEMA TC 3.

2.6 OUTLET BOXES

A. Sheet Metal Outlet Boxes: NEMA OS 1, galvanized steel.

1. Luminaire and Equipment Supporting Boxes: Rated for weight of equipment supported; furnish 1/2 inch male fixture studs where required.
2. Concrete Ceiling Boxes: Concrete type.

B. Cast Boxes: NEMA FB 1, Type FD, cast feralloy. Furnish gasketed cover by box manufacturer. Furnish threaded hubs.

C. Wall Plates for Finished Areas: As specified in Section 26 27 26.

D. Wall Plates for Unfinished Areas: Furnish gasketed cover.

2.7 PULL AND JUNCTION BOXES

A. Sheet Metal Boxes: NEMA OS 1, galvanized steel.

B. Hinged Enclosures: As specified in Section 26 27 16.

C. Surface Mounted Cast Metal Box: NEMA 250, Type 4; flat-flanged, surface mounted junction box:
1. Material: Galvanized cast iron.
2. Cover: Furnish with ground flange, neoprene gasket, and stainless-steel cover screws.

PART 3 EXECUTION

3.1 EXAMINATION

A. Verify outlet locations and routing and termination locations of raceway prior to rough-in.

3.2 EXISTING WORK

A. Remove exposed abandoned raceway, including abandoned raceway above accessible ceiling finishes. Cut raceway flush with walls and floors, and patch surfaces.

B. Remove concealed abandoned raceway to its source.

C. Disconnect abandoned outlets and remove devices. Remove abandoned outlets when raceway is abandoned and removed. Install blank cover for abandoned outlets not removed.

D. Maintain access to existing boxes and other installations remaining active and requiring access. Modify installation or provide access panel.

E. Extend existing raceway and box installations using materials and methods compatible with existing electrical installations or as specified.

F. Clean and repair existing raceway and boxes to remain or to be reinstalled.

3.3 INSTALLATION

A. Ground and bond raceway and boxes in accordance with Section 26 05 26.

B. Fasten raceway and box supports to structure and finishes in accordance with Section 26 05 29.

C. Identify raceway and boxes in accordance with Section 26 05 53.

D. Arrange raceway and boxes to maintain headroom and present neat appearance.

3.4 INSTALLATION - RACEWAY

A. Raceway routing is shown in approximate locations unless dimensioned. Route to complete wiring system.

B. Arrange raceway supports to prevent misalignment during wiring installation.

C. Support raceway using coated steel or malleable iron straps, lay-in adjustable hangers, clevis hangers, and split hangers.

D. Group related raceway; support using conduit rack. Construct rack using steel channel specified in Section 26 05 29.

E. Do not support raceway with wire or perforated pipe straps. Remove wire used for temporary supports

F. Do not attach raceway to ceiling support wires or other piping systems.

G. Construct wireway supports from steel channel specified in Section 26 05 29.

H. Route exposed raceway parallel and perpendicular to walls.

I. Route raceway installed above accessible ceilings parallel and perpendicular to walls.

J. Maintain clearance between raceway and piping for maintenance purposes.

K. Maintain 12 inch clearance between raceway and surfaces with temperatures exceeding 104 degrees F.

L. Cut conduit square using saw or pipe cutter; de-burr cut ends.

M. Bring conduit to shoulder of fittings; fasten securely.

N. Join nonmetallic conduit using cement as recommended by manufacturer. Wipe nonmetallic conduit dry and clean before joining. Apply full even coat of cement to entire area inserted in fitting. Allow joint to cure for minimum 20 minutes.

O. Install conduit hubs or sealing locknuts to fasten conduit to sheet metal boxes in damp and wet locations and to cast boxes.

P. Install no more than equivalent of three 90 degree bends between boxes. Install conduit bodies to make sharp changes in direction, as around beams. Install hydraulic one-shot bender to fabricate factory elbows for bends in metal conduit larger than 2 inch size.

Q. Avoid moisture traps; install junction box with drain fitting at low points in conduit system.

R. Install fittings to accommodate expansion and deflection where raceway crosses seismic, control and expansion joints.

S. Install suitable pull string or cord in each empty raceway except sleeves and nipples.

T. Install suitable caps to protect installed conduit against entrance of dirt and moisture.

U. Surface Raceway: Install flat-head screws, clips, and straps to fasten raceway channel to surfaces; mount plumb and level. Install insulating bushings and inserts at connections to outlets and corner fittings.

3.5 INSTALLATION - BOXES

A. Install wall mounted boxes at elevations to accommodate mounting heights as indicated on Drawings.

B. Install pull boxes and junction boxes above accessible ceilings and in unfinished areas only.

C. In Accessible Ceiling Areas: Install outlet and junction boxes no more than 6 inches from ceiling access panel or from removable recessed luminaire.

D. Locate flush mounting box in masonry wall to require cutting of masonry unit corner only. Coordinate masonry cutting to achieve neat opening.

E. Do not install flush mounting box back-to-back in walls; install with minimum 6 inches separation. Install with minimum 24 inches separation in acoustic rated walls.

F. Secure flush mounting box to interior wall and partition studs. Accurately position to allow for surface finish thickness.

G. Install stamped steel bridges to fasten flush mounting outlet box between studs.

H. Install flush mounting box without damaging wall insulation or reducing its effectiveness.

I. Install adjustable steel channel fasteners for hung ceiling outlet box.

J. Do not fasten boxes to ceiling support wires or other piping systems.

K. Support boxes independently of conduit.

L. Install gang box where more than one device is mounted together. Do not use sectional box.

M. Install gang box with plaster ring for single device outlets.

3.6 INTERFACE WITH OTHER PRODUCTS

A. Install conduit to preserve fire resistance rating of partitions and other elements, using approved materials.

B. Route conduit through roof openings for piping and ductwork or through suitable roof jack with pitch pocket.

C. Locate outlet boxes to allow luminaires positioned as indicated on Drawings.

D. Align adjacent wall mounted outlet boxes for switches, thermostats, and similar devices.

3.7 ADJUSTING

A. Adjust flush-mounting outlets to make front flush with finished wall material.

B. Install knockout closures in unused openings in boxes.

3.8 CLEANING

A. Clean interior of boxes to remove dust, debris, and other material.

B. Clean exposed surfaces and restore finish.

END OF SECTION

SECTION 26 05 53

IDENTIFICATION FOR ELECTRICAL SYSTEMS

PART 1 GENERAL

1.1 SUMMARY

A. Section Includes:
   1. Nameplates.
   2. Labels.
   3. Wire markers.

1.2 ENVIRONMENTAL REQUIREMENTS

A. Install labels and nameplates only when ambient temperature and humidity conditions for adhesive are within range recommended by manufacturer.

PART 2 PRODUCTS

2.1 NAMEPLATES

A. Product Description: Laminated three-layer plastic with engraved black letters on white background.

B. Letter Size:
   1. 1/8 inch (3 mm) high letters for identifying individual equipment and loads.
   2. 1/4 inch (6mm) high letters for identifying grouped equipment and loads.

2.2 LABELS

A. Labels: Adhesive tape, with 3/16 inch black letters on white background.

2.3 WIRE MARKERS

A. Description: Cloth tape, split sleeve, or tubing type wire markers.

B. Legend:
   1. Power and Lighting Circuits: Branch circuit or feeder number as indicated on Drawings.

2.4 UNDERGROUND WARNING TAPE

A. Manufacturers:
   1. Brady
   2. Kolbi
   3. Seton
   4. Substitutions: Must be approved by Engineer.

B. Description: 4inch wide plastic tape, colored red with suitable warning legend describing buried electrical lines.

PART 3 EXECUTION

3.1 PREPARATION

A. Degrease and clean surfaces to receive adhesive for identification materials.

3.2 EXISTING WORK

A. Install identification on existing switchboard 'MDP' to remain in accordance with this section. Re-apply proper labels to remaining breaker sections, including main and feeders.

3.3 INSTALLATION

A. Install identifying devices after completion of painting.

B. Nameplate Installation:
   1. Install nameplate parallel to equipment lines.
   2. Install nameplate for each electrical distribution and control equipment enclosure with corrosive-resistant mechanical fasteners, or adhesive.
   3. Install nameplates for each control panel and major control components located outside panel with corrosive-resistant mechanical fasteners, or adhesive.
   4. Secure nameplate to equipment front using screws, rivets, or adhesive.
   5. Secure nameplate to inside surface of door on recessed panelboard in finished locations.
   6. Install nameplates for the following:
      a. Panelboards – label any modified branch circuits at the panelboard. Also label equipment with appropriate panel branch circuit designation.
      b. Switchboards – label each switchboard section with designator shown on project drawings. Label each breaker in switchboard, including main and branch breakers, with the appropriate destination equipment.

C. Label Installation:
   1. Install label parallel to equipment lines.
   2. Install label for identification of individual branch circuit serving device on all receptacles and junction boxes. Label shall be affixed outside receptacle cover plate. Also handwrite circuit with black permanent marker inside cover plate.

D. Wire Marker Installation:
   1. Install wire marker for each conductor at panelboard gutters, pull boxes, outlet and junction boxes, and each load connection.
   2. Mark data cabling at each end. Install additional marking at accessible locations along the cable run.
   3. Install labels at data outlets identifying patch panel and port designation as indicated on Drawings.

END OF SECTION

SECTION 26 29 13

ENCLOSED CONTROLLERS

PART 1 GENERAL

1.1 SUMMARY

A. Section includes manual and magnetic motor controllers in individual enclosures.

B. Related Sections:
   1. Section 26 28 13 - Fuses.

1.2 REFERENCES

A. National Electrical Manufacturers Association:
   1. NEMA FU 1 - Low Voltage Cartridge Fuses.
   2. NEMA ICS 2 - Industrial Control and Systems: Controllers, Contactors, and Overload Relays, Rated Not More Than 2000 Volts AC or 750 Volts DC.
   3. NEMA ICS 5 - Industrial Control and Systems: Control Circuit and Pilot Devices.
   4. NEMA ICS 6 - Industrial Control and Systems: Enclosures.
   5. NEMA KS 1 - Enclosed and Miscellaneous Distribution Equipment Switches (600 Volts Maximum).

B. International Electrical Testing Association:
   1. NETA ATS - Acceptance Testing Specifications for Electrical Power Distribution Equipment and Systems.

C. Underwriters Laboratories Inc.:
   1. UL 489 - Molded-Case Circuit Breakers, Molded-Case Switches, and Circuit-Breaker Enclosures.

1.3 SUBMITTALS

A. Product Data: Submit catalog sheets showing voltage, controller size, ratings and size of switching and overcurrent protective devices, short circuit ratings, dimensions, and enclosure details.

B. Test Reports: Indicate field test and inspection procedures and test results.

1.4 QUALIFICATIONS

A. Manufacturer: Company specializing in manufacturing products specified in this section with minimum three years' experience.

PART 2 PRODUCTS

2.1 MANUAL MOTOR CONTROLLER

A. Product Description: NEMA ICS 2, AC general-purpose, Class A, manually operated, full-voltage controller with overload element, red pilot light, NO, NC, auxiliary contact, and toggle operator.

B. Enclosure: NEMA ICS 6, Type to meet conditions of installation.

2.2 MOTOR STARTING SWITCH

A. Product Description: NEMA ICS 2, AC general-purpose Class A manually operated, full-voltage controller for fractional horsepower induction motors, without thermal overload unit, with red pilot light and toggle operator.

B. Enclosure: NEMA ICS 6, Type to meet conditions of installation.

2.3 FULL-VOLTAGE NON-REVERSING CONTROLLERS

A. Product Description: NEMA ICS 2, AC general-purpose Class A magnetic controller for induction motors rated in horsepower.

B. Control Voltage: 120 volts, 60 Hertz.

C. Overload Protection: Thermal.

D. Product Features:
1. Auxiliary Contacts: NEMA ICS 2, 2 field convertible contacts in addition to seal-in contact.
2. Cover Mounted Pilot Devices: NEMA ICS 5, heavy duty type.
3. Pilot Device Contacts: NEMA ICS 5, Form Z, rated A150.
4. Pushbuttons: Shrouded type.
5. Indicating Lights: LED type.
6. Selector Switches: Rotary type.
7. Relays: NEMA ICS 2.
8. Control Power Transformers: 120 volt secondary, 50 VA minimum, in each motor starter. Furnish fused primary and secondary, and bond unfused leg of secondary to enclosure.

E. Combination Controllers: Combine motor controllers with disconnect in common enclosure, using thermal magnetic circuit breaker conforming to UL 489, with integral thermal and instantaneous magnetic trip in each pole.

F. Enclosure: NEMA ICS 6, to meet conditions. Fabricate enclosure from steel finished with manufacturer's standard gray enamel.
1. Interior Dry Locations: Type 1.
2. Exterior Locations: Type 3R.

PART 3 EXECUTION

3.1 EXISTING WORK

A. Disconnect and remove abandoned enclosed motor controllers.

B. Maintain access to existing enclosed motor controllers and other installations to remain active and to require access. Modify installation or provide access panel.

C. Clean and repair existing enclosed motor controllers to be reinstalled.

3.2 INSTALLATION

A. Install enclosed controllers plumb. Provide supports in accordance with Section 26 05 29.

B. Height: 5 feet to operating handle.

C. Install fuses for fusible switches. Refer to Section 26 28 13 for product requirements.

D. Select and install overload heater elements in motor controllers to match installed motor characteristics.

E. Install engraved plastic nameplates. Refer to Section 26 05 53 for product requirements and location.

F. Neatly type label and place inside each motor controller door identifying motor served, nameplate horsepower, full load amperes, code letter, service factor, and voltage/phase rating. Place label in clear plastic holder.

3.3 FIELD QUALITY CONTROL

A. Inspect and test in accordance with NETA ATS, except Section 4.

END OF SECTION

Clark Dietz, Inc.
1815 S. Meyers Rd., Suite 470
Oakbrook Terrace, IL 60181

p 630.413.4130

clarkdietz.com

ClarkDietz

Engineering Quality of Life™

VILLAGE OF OAK PARK
BID NO. 22-401BM
NORTH FIRE STATION
BOILER REPLACEMENT
ISSUED FOR BID
MAY 25, 2022

SHEET LIST	
NUMBER	TITLE
G0.01	COVER
M0.01	GENERAL NOTES AND LEGENDS
M1.00	BASEMENT MECHANICAL DEMOLITION AND NEW WORK PLAN
M4.01	MECHANICAL SCHEDULES AND DETAILS
M4.02	MECHANICAL DETAILS
E1.00	ELECTRICAL DEMO AND NEW PLAN

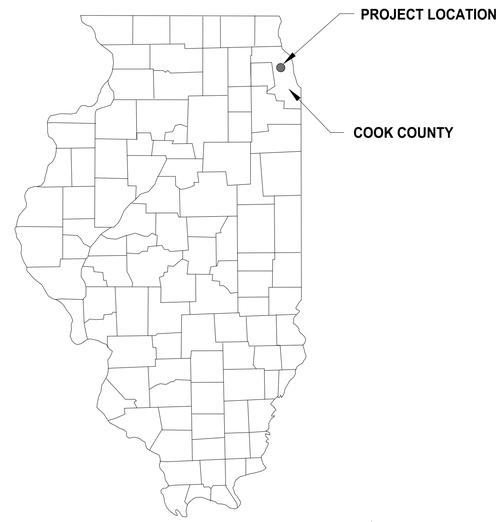

GENERAL LOCATION MAP

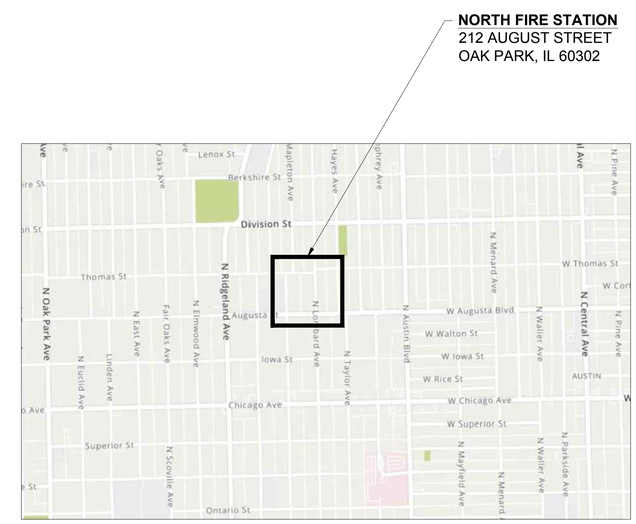

PROJECT LOCATION MAP

ClarkDietz
DESIGN FIRM REG. 184-000450
1815 S. MEYERS RD, STE 470
OAKBROOK TERRACE, IL 60181
PHONE : 630.413.4130
www.clarkdietz.com

Oak Park
VILLAGE OF OAK PARK
123 MADISON STREET
OAK PARK, IL 60302

PROJECT TITLE
OAK PARK
FIRE STATION
BOILER REPLACEMENT

DESIGNED BY:	MCB
DRAWN BY:	MCB
CHECKED BY:	NTP
DATE CHECKED:	05.23.2022

DATE	REVISION
05.25.22	ISSUED FOR BID

DRAWING TITLE
COVER

PROJECT No.
O0400040

DRAWING No.
G0.01

PLOT DATE 5/23/2022 6:04 PM
P:\00400040_OAK PARK - FIRE STATION 2 BOILER\DESIGN\CAD\SHEETS\G0.01.DWG MARIA C. BEHRENS SAVE TIME 5/23/2022 5:56:49 PM
NOTE: DIMENSIONAL DATA IS NOT TO BE OBTAINED BY SCALING ANY PORTION OF THIS DRAWING.

HEATING LEGEND

SYMBOL	DESCRIPTION
HWS	HOT WATER HEATING SUPPLY
HWR	HOT WATER HEATING RETURN
	ELBOW DOWN OR AWAY
	ELBOW UP OR TOWARD
	TEE DOWN OR AWAY
	TEE UP OR TOWARD
	RISE OR DROP
	90° ELBOW
	PIPE TEE
	PIPE TAKEOFF (FROM BOTTOM OF MAIN)
	PIPE TAKEOFF (FROM TOP OF MAIN)
	45° ELBOW
	45° BRANCH
	PITCH PIPING IN DIRECTION OF ARROW
	BALANCING VALVE
	BALL VALVE
	TO BE REMOVED
	NEW CONNECTION TO EXISTING
	EXISTING EQUIPMENT
XØ	ROUND DUCTWORK

ABBREVIATIONS

AS	AIR SEPARATOR
B	BOILER
EAT	ENTERING AIR TEMPERATURE
ET	EXPANSION TANK
EWT	ENTERING WATER TEMPERATURE
GPM	GALLONS PER MINUTE
HP	HORSE POWER
HWR	HEATING WATER RETURN
HWS	HEATING WATER SUPPLY
LAT	LEAVING AIR TEMPERATURE
LWT	LEAVING WATER TEMPERATURE
MBH	THOUSAND BRITISH THERMAL UNITS PER HOUR
P	PUMP
RPM	REVOLUTION PER MINUTE
TDH	TOTAL DYNAMIC HEAD
TYP.	TYPICAL
WPD	WATER PRESSURE DROP

GENERAL DEMOLITION HEATING NOTES

1. VERIFY EXACT SIZE AND LOCATION OF EXISTING UTILITIES PRIOR TO START OF DEMOLITION.
2. DISCONNECT ALL HEATING PIPING CONNECTIONS TO EQUIPMENT BEING REMOVED.
3. UNLESS OTHERWISE NOTED, REMOVAL OF PIPING AND/OR EQUIPMENT SHALL INCLUDE ALL INSULATION, VALVES, HANGERS, SUPPORTS, EQUIPMENT PADS, FLASHING, CONTROLS, AND ASSOCIATED ACCESSORIES.
4. UNLESS OTHERWISE NOTED, REMOVAL OF PIPING SHALL BE BACK TO THE MAIN OR LAST ACTIVE SERVICE.
5. ALL OPENINGS OR HOLES LEFT IN EXISTING WALLS, FLOORS, AND CEILINGS TO REMAIN, INCLUDING CHASES, SHALL BE PATCHED TO MATCH EXISTING CONDITIONS.

GENERAL HEATING NOTES

1. THE LOCATIONS AND SIZES OF EXISTING PIPING AND EQUIPMENT HAS BEEN TAKEN FROM "AS-BUILT" DRAWINGS AND INFORMATION PROVIDED BY THE OWNER. CONTRACTOR SHALL FIELD VERIFY ALL EXISTING CONDITIONS PRIOR TO START OF WORK.
2. PIPING IS SHOWN IN SCHEMATIC FORM ONLY, CHANGES IN ELEVATION ARE NOT NECESSARILY SHOWN. ROUTE PIPING IN AN ORDERLY MANNER AS REQUIRED FOR CLEARANCE WITH STRUCTURAL CONDITIONS. COORDINATE LOCATION OF PIPING WITH OTHER TRADES PRIOR TO INSTALLATION. WHERE POSSIBLE, RACK PIPING HORIZONTALLY OR VERTICALLY.
3. COORDINATE LOCATIONS AND SIZES OF PIPING CONNECTIONS WITH ALL TRADES.
4. ALL CONNECTIONS TO, OR SHUTDOWNS OF, EXISTING SYSTEMS SHALL BE COORDINATED WITH THE OWNER TO PROVIDE MINIMUM INTERFERENCE WITH THEIR OPERATION AND DOWNTIME OF THE SYSTEM. PROVIDE PROPOSED PHASING PLAN FOR CONNECTIONS TO EXISTING SERVICES TO OWNER FOR APPROVAL PRIOR TO STARTING OF WORK.
5. PROVIDE AND INSTALL ISOLATION VALVES IN ALL BRANCH PIPING.
6. CONNECTIONS TO EQUIPMENT SHALL BE PROVIDED WITH ISOLATION VALVES AND UNIONS TO FACILITATE EQUIPMENT REMOVAL.
7. LOCATE ALL ISOLATION VALVES IN AN ACCESSIBLE LOCATION. WHERE VALVES ARE NOT ACCESSIBLE PROVIDE 12X12 ACCESS DOOR.
8. CONTRACTOR SHALL BE RESPONSIBLE FOR PROVIDING ADEQUATE SUPPORTING SYSTEMS AND DEVICES FOR ALL HEATING PIPING, EQUIPMENT, AND ACCESSORIES.
9. SEE HEATING DETAILS FOR EXACT PIPING CONNECTIONS TO EQUIPMENT, INCLUDING VALVES, TRAPS, AND SYSTEM ACCESSORIES.
10. BALANCING VALVES SHALL BE, AT A MINIMUM, ONE PIPE SIZE SMALLER THAN THE PIPING IN WHICH THEY ARE INSTALLED. CONTRACTOR SHALL VERIFY THAT VALVE CAN BE ADJUSTED TO MEET FLOW REQUIREMENTS WITHOUT THE PRODUCTION OF UNACCEPTABLE NOISE.
11. LOCATE AND INSTALL ALL HEATING EQUIPMENT TO PROVIDE MANUFACTURER'S MINIMUM SERVICE CLEARANCES.

ClarkDietz
DESIGN FIRM REG. 184-000450
1815 S. MEYERS RD, STE 470
OAKBROOK TERRACE, IL 60181
PHONE : 630.413.4130
www.clarkdietz.com

Oak Park
VILLAGE OF OAK PARK
123 MADISON STREET
OAK PARK, IL 60302

PROJECT TITLE
OAK PARK
FIRE STATION
BOILER REPLACEMENT

DESIGNED BY:	MCB
DRAWN BY:	MCB
CHECKED BY:	NTP
DATE CHECKED:	05.23.2022

DATE	REVISION
05.25.22	ISSUED FOR BID

DRAWING TITLE
GENERAL NOTES AND LEGENDS

PROJECT No.
O0400040

DRAWING No.
M0.01

P:\00400040_OAK PARK - FIRE STATION 2 BOILER\DESIGN\CAD\SHEETS\HVAC GENERAL NOTES AND LEGEND.DWG MARIA C. BEHRENS SAVE TIME 5/23/2022 5:56:53 PM
PLOT DATE 5/23/2022 6:04 PM
NOTE: DIMENSIONAL DATA IS NOT TO BE OBTAINED BY SCALING ANY PORTION OF THIS DRAWING.

PLOT DATE 5/23/2022 6:05 PM

P:\00400040 OAK PARK - FIRE STATION 2 BOILER\DESIGN\CAD\SHEETS\PLAN.DWG MARIA C. BEHRENS SAVE TIME 5/23/2022 6:04:02 PM

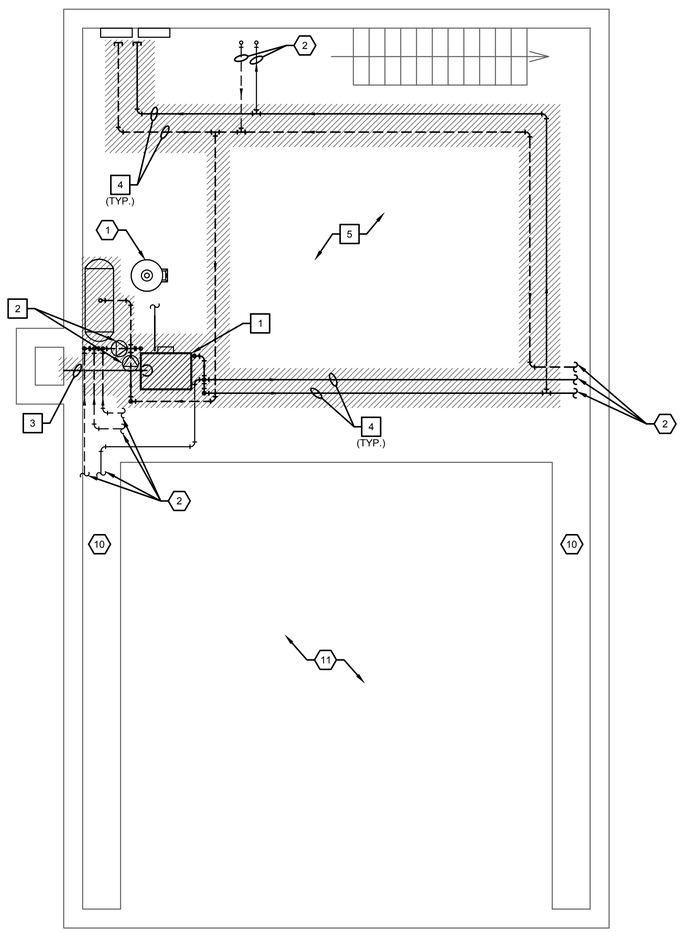

1 BASEMENT MECHANICAL DEMOLITION PLAN

0 1' 2' 4' 8'

SCALE 1/4" = 1'

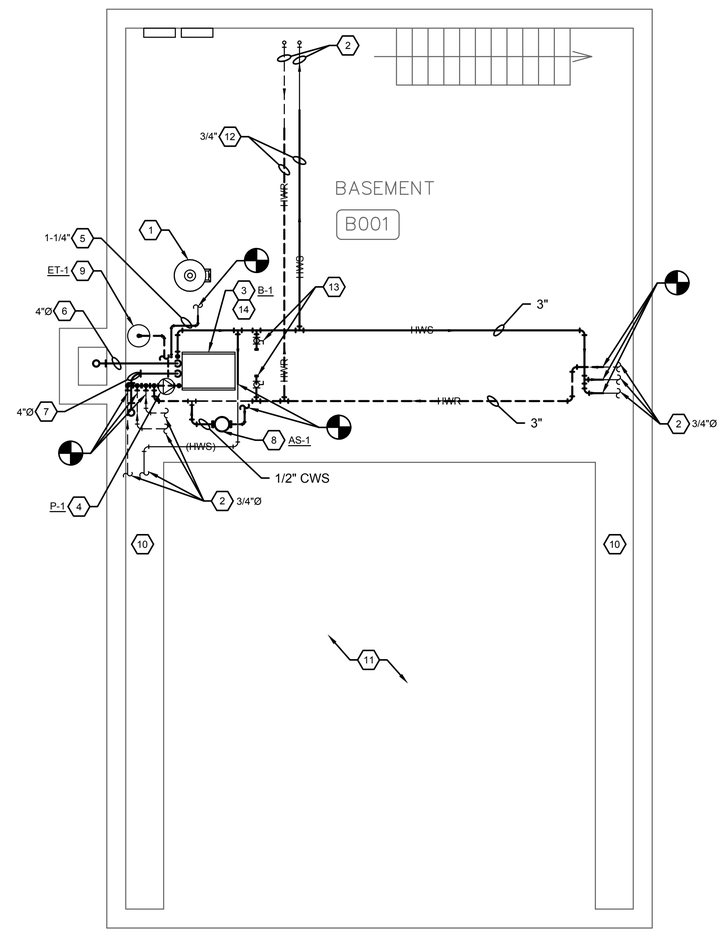

2 BASEMENT MECHANICAL NEW WORK PLAN

0 1' 2' 4' 8'

SCALE 1/4" = 1'

NOTES (THIS SHEET)

1. REFER TO M0.01 FOR GENERAL NOTES, SYMBOLS, AND ABBREVIATIONS.
2. THE CONTRACTOR IS RESPONSIBLE FOR DRAINING AND REFILLING OF SYSTEM AS REQUIRED AS PART OF BOILER INSTALLATION.

DEMOLITION KEYNOTES (THIS SHEET)

1. REMOVE EXISTING BOILER AND ASSOCIATED ACCESSORIES. EXISTING CONCRETE PAD TO REMAIN.
2. REMOVE EXISTING BOILER PUMP, PIPING, ACCESSORIES AND CONTROLS.
3. REMOVE EXISTING FLUE THROUGH CHIMNEY WALL. EXISTING OPENING IN WALL TO BE REUSED.
4. REMOVE EXISTING HWS & HWR PIPING THROUGHOUT BASEMENT UP TO TAKEOFF BRANCHES FEEDING EQUIPMENT ABOVE.
5. REMOVE ALL ABANDON PIPING THROUGHOUT BASEMENT. CONTRACTOR TO CONFIRM PIPING IN FIELD.

KEYNOTES (THIS SHEET)

1. EXISTING WATER HEATER TO REMAIN.
2. EXISTING HWS/HWR PIPING BRANCHES FEEDING EQUIPMENT ABOVE TO REMAIN. CONTRACTOR TO CONFIRM EXISTING SIZE, QUANTITY AND ROUTING IN FIELD.
3. PROVIDE NEW BOILER IN PLACE OF EXISTING BOILER. COORDINATE LOCATION TO MEET MANUFACTURER'S CLEARANCE REQUIREMENTS. MODIFY EXISTING CONCRETE PAD AS REQUIRED TO ACCOMMODATE NEW UNIT. SEE DETAIL 1/M4.01.
4. PROVIDE NEW BOILER PUMP. SEE DETAIL 2/M4.01.
5. NEW GAS PIPING TO BOILER. MAKE CONNECTION TO EXISTING GAS PIPING. MODIFY EXISTING PIPING AS REQUIRED FOR NEW BOILER INSTALLATION. SEE DETAIL.
6. PROVIDE NEW 4" PVC FLUE FROM BOILER. ROUTE FLUE THROUGH WALL TO CHIMNEY. COORDINATE ROUTING WITH EXISTING WATER HEATER FLUE TO REMAIN. MODIFY EXISTING OPENING TO ALLOW INSTALLATION OF NEW FLUE. SEAL OPENING WATER TIGHT AND MATCH ADJACENT FINISHES. EXTEND FLUE UP CHIMNEY TO ROOF. TERMINATE FLUE PER MANUFACTURER'S RECOMMENDATION 2'-0" (MIN) ABOVE ROOF LEVEL. MAINTAIN MINIMUM OF 10'-0" CLEARANCE FROM ALL INTAKE OPENINGS, INCLUDING WINDOWS ON THE SECOND FLOOR.
7. PROVIDE NEW 4" PVC OUTDOOR AIR DUCT TO BOILER. ROUTE UP THROUGH FLOOR AND OUT THROUGH WEST EXTERIOR WALL. PROVIDE NEW OPENING IN WALL TO ALLOW INSTALLATION OF NEW INTAKE. SEAL OPENING WATER TIGHT AND MATCH ADJACENT FINISHES. TERMINATE INTAKE OUTSIDE ALONG WALL WITH 45 DEGREE FITTING POINTED DOWN 8'-0" (MIN) ABOVE GRADE WITH BIRD SCREEN.
8. PROVIDE NEW AIR SEPARATOR. SUPPORT FROM EXISTING STRUCTURE ABOVE. MAKE CONNECTIONS TO HWR AND EXISTING WATER MAKEUP PIPING. MODIFY MAKEUP PIPING AS REQUIRE TO INSTALL NEW SEPARATOR. SEE DETAIL 3/M4.01.
9. PROVIDE NEW EXPANSION TANK. SEE SCHEDULE AND DETAIL 3/M4.01.
10. EXISTING HWS AND HWR PIPING IN CRAWL SPACE.
11. SLAB ON GRADE. NO ACCESS.
12. PIPE SIZE TO MATCH EXISTING. CONTRACTOR TO CONFIRM SIZE IN FIELD.
13. NEW 1-1/2" HWS/R FUTURES CAPPED AND VALVED.
14. PROVIDE NEW OA SENSOR FOR BOILER. OA SENSOR TO BE LOCATED ALONG WEST EXTERIOR WALL MINIMUM 10'-0" ABOVE GRADE.

ClarkDietz
DESIGN FIRM REG. 184-000450
1815 S. MEYERS RD, STE 470
OAKBROOK TERRACE, IL 60181
PHONE : 630.413.4130
www.clarkdietz.com

Oak Park
VILLAGE OF OAK PARK
123 MADISON STREET
OAK PARK, IL 60302

PROJECT TITLE

OAK PARK
FIRE STATION
BOILER REPLACEMENT

DESIGNED BY:	MCB
DRAWN BY:	MCB
CHECKED BY:	NTP
DATE CHECKED:	05.23.2022

DATE	REVISION
05.25.22	ISSUED FOR BID

DRAWING TITLE

BASEMENT MECHANICAL
DEMOLITION AND NEW WORK
PLAN

PROJECT No.
O0400040

DRAWING No.
M1.00

NOTE: DIMENSIONAL DATA IS NOT TO BE OBTAINED BY SCALING ANY PORTION OF THIS DRAWING.

HOT WATER PUMP SCHEDULE

TAG	SERVICE / LOCATION	PUMP DATA: TYPE	OPER. TEMP. (°F)	FLOW (GPM)	T.D.H. (FT. OF H20)	RPM	MOTOR HP	ELEC. CHAR.: V	PH	HZ	FLA	MCA	MCOP (AMPS)	REMARKS	DESIGN BASIS: MANUFACTURER	MODEL NUMBER
P-1	HEATING HOT WATER / BASEMENT	IN-LINE	180	38	60	1631	1.50	120	1	60	--	--	--	1	BELL & GOSSET	15SV5

NOTES:
1. PUMP SHALL BE ACTIVATED BY THE (2) EXISTING TEMPERATURE SENSORS. ONE IS LOCATED ON THE 1ST FLOOR, THE OTHER ON THE 2ND FLOOR. WHEN THERE IS A CALL FOR HEATING ON EITHER FLOOR, PUMP SHALL RUN. PUMP SHALL BE OFF WHEN THERE IS NOT A CALL FOR HEATING.

HOT WATER BOILER SCHEDULE

TAG	SERVICE / LOCATION	FUEL DATA: INPUT (MBH)	MIN PRESS (IN WC)	OUTPUT (MBH)	MEDIA	FLOW RATE (GPM)	EWT/LWT (°F)	ELEC. CHAR.: V	PH	HZ	REMARKS	DESIGN BASIS: MANUFACTURER	MODEL NUMBER
B-1	HEATING HOT WATER / BASEMENT	399	4	387	WATER	38	160/180	120	1	60	1,2	LOCHINVAR	KBX-0400

NOTES:
1. PROVIDE MANUFACTURER'S CONTROLS TO OPERATE BOILER. BOILER TO ACTIVATE BASED ON OUTDOOR AIR SETPOINT (45DEG, ADJ). PROVIDE MANUFACTURER'S OUTDOOR AIR SENSOR. WHEN THERE IS NOT A CALL FOR HEATING BY THE (2) EXISTING TEMPERATURE SENSORS, THE BOILER SHALL BE ON STANDBY.
2. PROVIDE 50 PSIG RELIEF VALVE.

EXPANSION TANK SCHEDULE

TAG	SERVICE / LOCATION	TYPE	ASME CONSTR.	WORKING PRESSURE (PSIG)	TANK CAPACITY (GAL)	TANK SIZE (IN.) HEIGHT x DIAM.	OPER. TEMP. (°F)	AIR PRE-CHARGE PRESSURE (PSIG)	REMARKS	DESIGN BASIS: MANUFACTURER	MODEL NUMBER
ET-1	HEATING HOT WATER / BASEMENT	BLADDER	YES	125	11	28 X 14	180	12	--	TACO	CBX42-125

AIR SEPARATOR SCHEDULE

TAG	SERVICE / LOCATION	FLOW RATE (GPM)	CONN. SIZE (IN)	REMARKS	DESIGN BASIS: MANUFACTURER	MODEL NUMBER
AS-1	HW HTG SYSTEM / BASEMENT	38	3	--	BELL & GOSSETT	R-3F

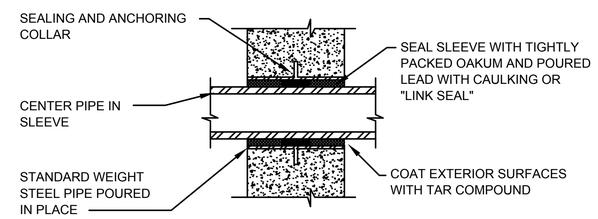

4 PIPE SLEEVE THRU EXTERIOR WALL
NOT TO SCALE

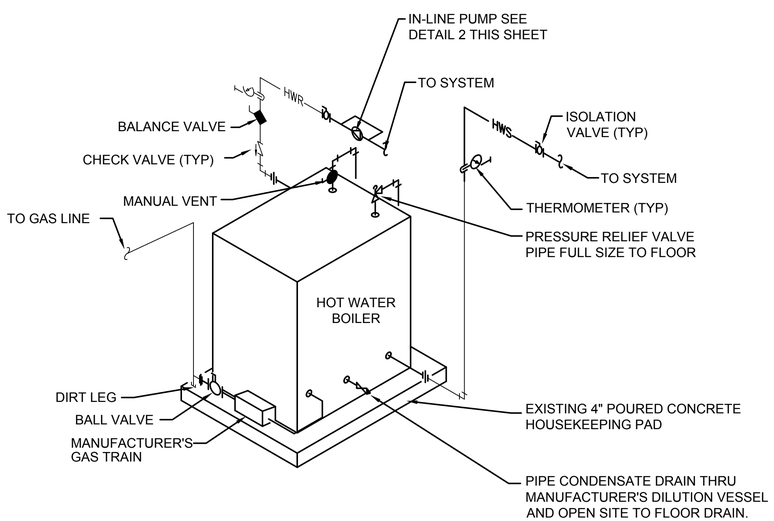

1 BOILER PIPING SCHEMATIC
NO SCALE

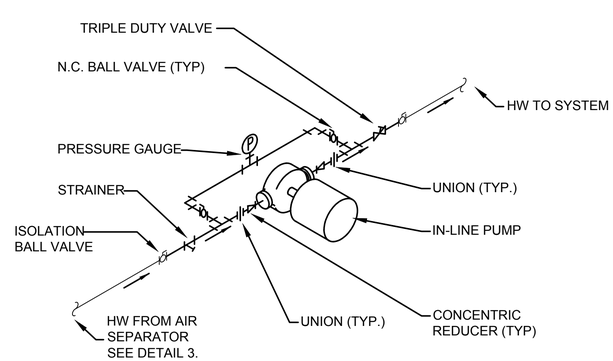

2 IN-LINE PUMP DETAIL
NO SCALE

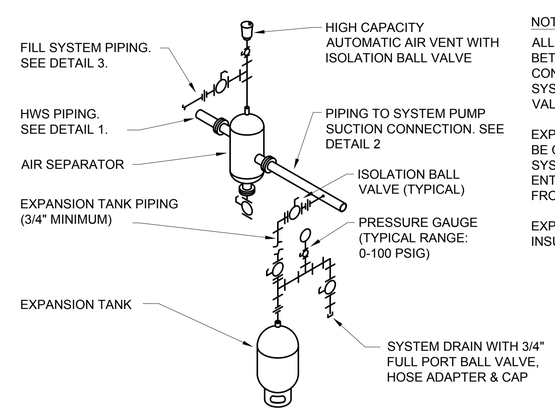

NOTES:
ALL THREADED NIPPLES/PIPING BETWEEN EACH POINT OF CONNECTION TO CLOSED LOOP SYSTEM AND FIRST ISOLATION VALVE TO BE SCHEDULE 80.

EXPANSION TANK PIPING MUST BE CONNECTED TO SIDE OF SYSTEM PIPING TO PREVENT ENTRANCE OF AIR OR DEBRIS FROM SYSTEM.

EXPANSION TANK PIPING TO BE INSULATED

3 AIR SEPARATOR/EXPANSION TANK SCHEMATIC
NOT TO SCALE

ClarkDietz
DESIGN FIRM REG. 184-000450
1815 S. MEYERS RD, STE 470
OAKBROOK TERRACE, IL 60181
PHONE : 630.413.4130
www.clarkdietz.com

Oak Park
VILLAGE OF OAK PARK
123 MADISON STREET
OAK PARK, IL 60302

PROJECT TITLE
OAK PARK FIRE STATION BOILER REPLACEMENT

DESIGNED BY: MCB
DRAWN BY: MCB
CHECKED BY: NRP
DATE CHECKED: 05.23.2022

DATE	REVISION
05.25.22	ISSUED FOR BID

DRAWING TITLE
MECHANICAL SCHEDULES AND DETAILS

PROJECT No.
O0400040

DRAWING No.
M4.01

DWG # OF # DWGS

PLOT DATE 5/23/2022 6:05 PM
P:\O0400040_OAK PARK - FIRE STATION 2 BOILER\DESIGN\CAD\SHEETS\MECHANICAL SCHEDULES.DWG MARIA C. BEHRENS SAVE TIME 5/23/2022 5:39:03 PM
NOTE: DIMENSIONAL DATA IS NOT TO BE OBTAINED BY SCALING ANY PORTION OF THIS DRAWING.

PLOT DATE 5/23/2022 6:05 PM

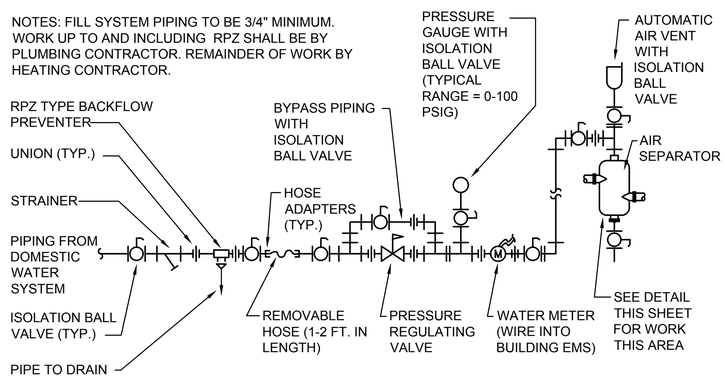

1 CLOSED LOOP HYDRONIC SYSTEM FILL SYSTEM PIPING SCHEMATIC

NO SCALE

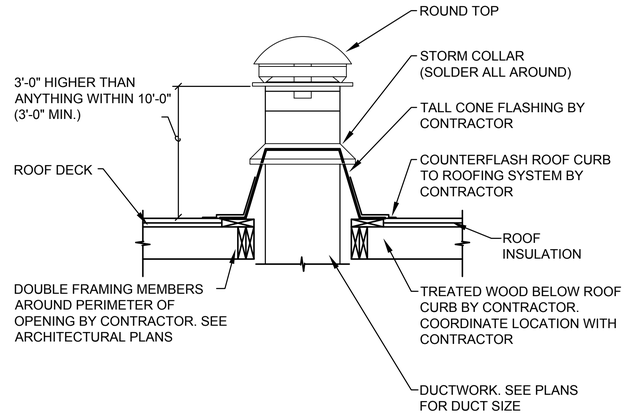

2 FLUE DETAIL

NOT TO SCALE

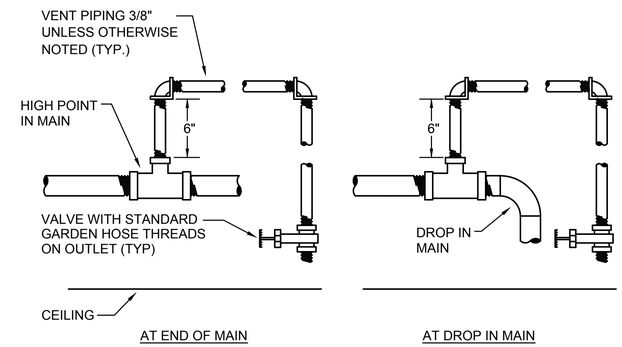

3 TYPICAL PIPING MAIN VENT DETAIL

NOT TO SCALE

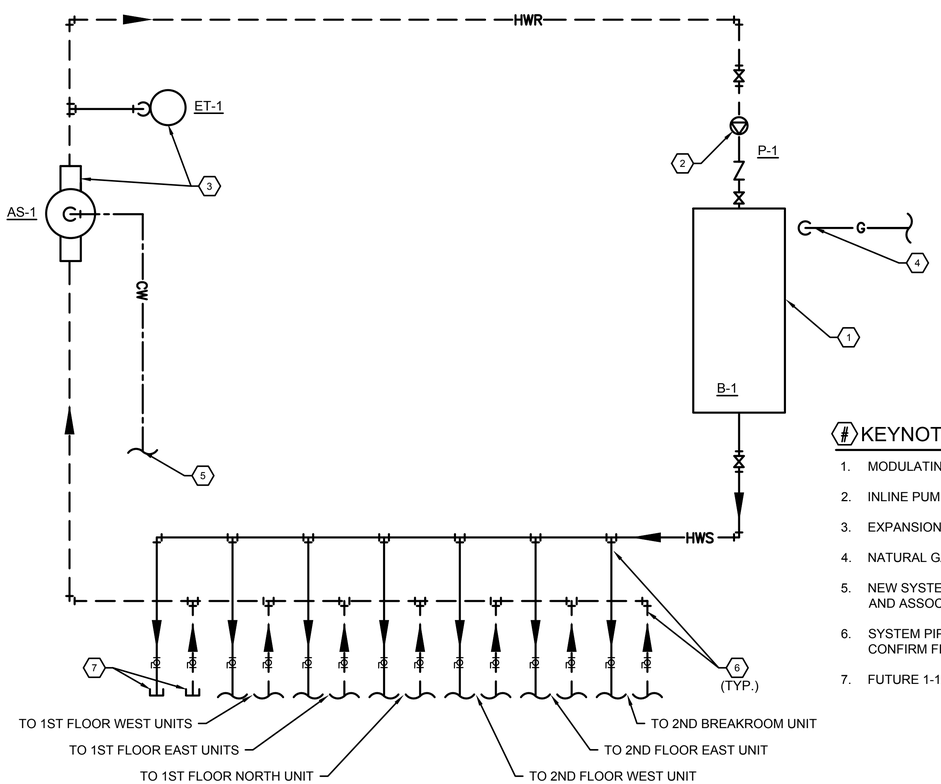

4 HEATING PIPING SCHEMATIC

NOT TO SCALE

KEYNOTES (THIS SHEET)

1. MODULATING BOILER.
2. INLINE PUMP (CONSTANT SPEED).
3. EXPANSION TANK AND AIR SEPARATOR.
4. NATURAL GAS PIPING DOWN TO BOILER.
5. NEW SYSTEM FILL PIPING 3/4" CW. PROVIDE BACKFLOW PREVENTER AND ASSOCIATED ACCESSORIES AND SUPPORTS.
6. SYSTEM PIPING TO/FROM EXISTING HEATING UNITS. CONTRACTOR TO CONFIRM FINAL QUANTITY AND ROUTING IN FIELD.
7. FUTURE 1-1/2" HWS/HWR VALVES.

ClarkDietz
DESIGN FIRM REG. 184-000450
1815 S. MEYERS RD, STE 470
OAKBROOK TERRACE, IL 60181
PHONE : 630.413.4100
www.clarkdietz.com

Oak Park
VILLAGE OF OAK PARK
123 MADISON STREET
OAK PARK, IL 60302

PROJECT TITLE
OAK PARK FIRE STATION BOILER REPLACEMENT

DESIGNED BY: MCB
DRAWN BY: MCB
CHECKED BY: NRP
DATE CHECKED: 05.23.2022

DATE	REVISION
05.25.22	ISSUED FOR BID

DRAWING TITLE
MECHANICAL DETAILS

PROJECT No.
O0400040

DRAWING No.
M4.02

DWG # OF # DWGS

NOTE: DIMENSIONAL DATA IS NOT TO BE OBTAINED BY SCALING ANY PORTION OF THIS DRAWING.

P:\O0400040_OAK PARK - FIRE STATION 2 BOILER\DESIGN\CAD\SHEETS\MECHANICAL SCHEDULES.DWG MARIA C. BEHRENS SAVE TIME 5/23/2022 5:39:03 PM

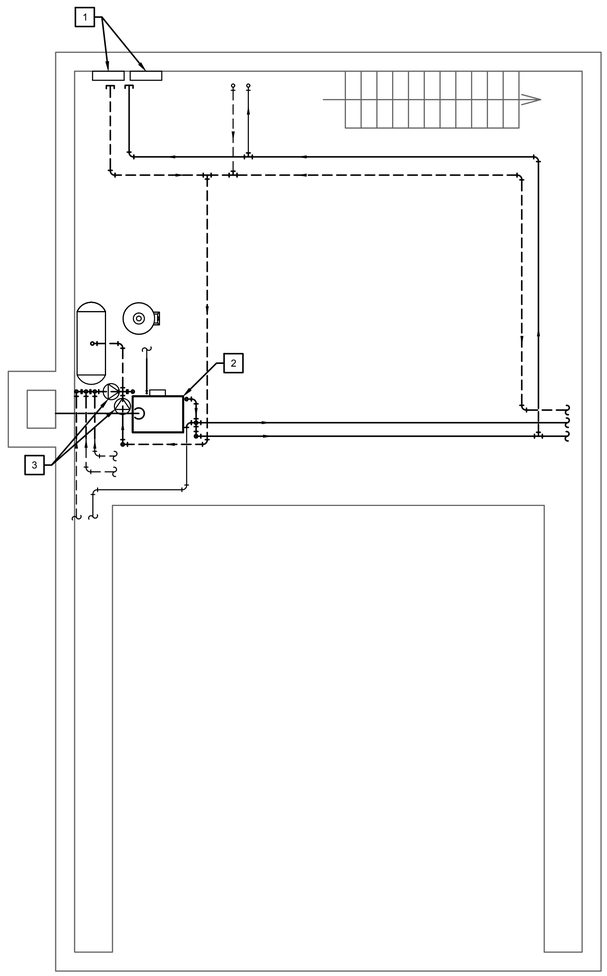

1 BASEMENT ELECTRICAL DEMOLITION PLAN

0 1' 2' 4' 8'

SCALE 1/4" = 1'

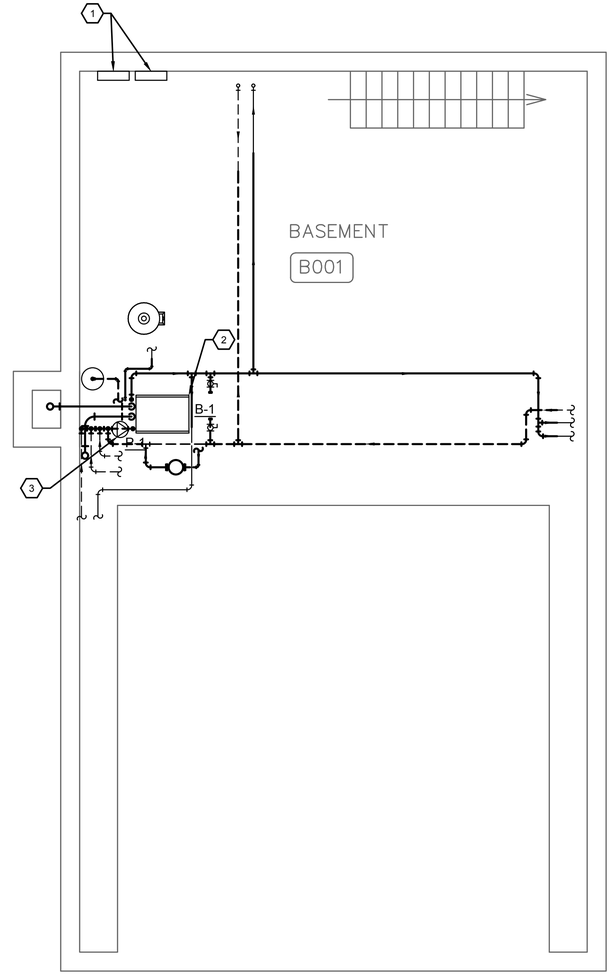

2 BASEMENT ELECTRICAL PLAN

0 1' 2' 4' 8'

SCALE 1/4" = 1'

GENERAL NOTES

1. COORDINATE EQUIPMENT LOCATIONS WITH MECHANICAL CONTRACTOR.

DEMO NOTES (THIS SHEET)

1. EXISTING LOAD CENTERS. CONTRACTOR SHALL TRACE EXISTING CIRCUITS SERVING THE EXISTING BOILER AND EXISTING IN-LINE PUMPS AND CONFIRM THAT NO OTHER LOADS ARE FED FROM THE SAME CIRCUITS. LABEL CIRCUIT BREAKERS AS "SPARE".
2. DISCONNECT EXISTING BOILER. REMOVE CONDUIT AND CONDUCTORS BACK TO SOURCE.
3. DISCONNECT EXISTING IN-LINE PUMP. REMOVE CONDUIT AND CONDUCTORS BACK TO SOURCE.

KEYNOTES (THIS SHEET)

1. EXISTING LOAD CENTERS. PROVIDE NEW CIRCUIT BREAKERS AT EXISTING LOAD CENTERS AS REQUIRED TO PROVIDE POWER TO NEW BOILER AND IN-LINE PUMP. EXISTING LOAD CENTERS APPEAR TO BE MANUFACTURED BY GE AND SIEMENS.
2. HOT WATER BOILER B-1. MAKE FINAL CONNECTIONS. SEE EQUIPMENT CONNECTION SCHEDULE.
3. IN-LINE PUMP P-1. MAKE FINAL CONNECTIONS. SEE EQUIPMENT CONNECTION SCHEDULE.

EQUIPMENT CONNECTION SCHEDULE

EQUIPMENT		LOCATION	VOLTAGE	PHASE	LOAD				SOURCE	CONDUCTORS - AWG					CONDUIT		CONTROLLER		LOCAL DISCONNECT				
TAG	DESCRIPTION				HP	KW	KVA	FLA		SETS	QTY.	SIZE	GRND	TYPE	SIZE	TYPE	TYPE	ENCLOSURE	SWITCH SIZE	POLE	FUSE (AMP)	ENCLOSURE	NOTES
P-1	BOILER PUMP	BASEMENT	120	1	1.5	--	--	20.0	SEE PLAN	1	2	10	10	THHN	3/4	EMT	MAG	NEMA 1	--	--	--	--	1,2,3
B-1	BOILER	BASEMENT	120	1	--	--	--	3.0	SEE PLAN	1	2	12	12	THHN	3/4	EMT	MAN	NEMA A	--	--	--	--	3,4,5

NOTES

1 PROVIDE NEW 50A/1P BREAKER WITH HANDLE LOCK OFF AT EXISTING LOAD CENTER.
2 PROVIDE NEMA SIZE 1 MAGNETIC MOTOR STARTER IN ENCLOSURE FOR CONTROL OF PUMP. COORDINATE COIL VOLTAGE WITH CONTROLS CONTACTOR.
3 PROVIDE LIQUIDTIGHT FLEXIBLE METALLIC CONDUIT CONNECTION TO MOTOR.
4 PROVIDE NEW 15A/1P BREAKER AT EXISTING LOAD CENTER.
5 PROVIDE MANUAL MOTOR STARTER FOR LOCAL POWER DISCONNECT.

ClarkDietz
DESIGN FIRM REG. 184-000450
1815 S. MEYERS RD, STE 470
OAKBROOK TERRACE, IL 60181
PHONE : 630.413.4100
www.clarkdietz.com

Oak Park
VILLAGE OF OAK PARK
123 MADISON STREET
OAK PARK, IL 60302

PROJECT TITLE
OAK PARK
FIRE STATION
BOILER REPLACEMENT

DESIGNED BY: PLZ
DRAWN BY: PLZ
CHECKED BY: NRP
DATE CHECKED: 05.23.2022

DATE	REVISION
05.25.22	ISSUED FOR BID

DRAWING TITLE
ELECTRICAL DEMO AND NEW PLAN

PROJECT No.
O0400040

DRAWING No.
E1.00

PLOT DATE 5/23/2022 6:05 PM
P:\O0400040_OAK PARK - FIRE STATION 2 BOILER\DESIGN\CAD\SHEETS\ELECTRICAL PLAN.DWG MARIA C. BEHRENS SAVE TIME 5/23/2022 3:05:22 PM
NOTE: DIMENSIONAL DATA IS NOT TO BE OBTAINED BY SCALING ANY PORTION OF THIS DRAWING.